ELETTROBAR 570040 EXPLODED VIEW

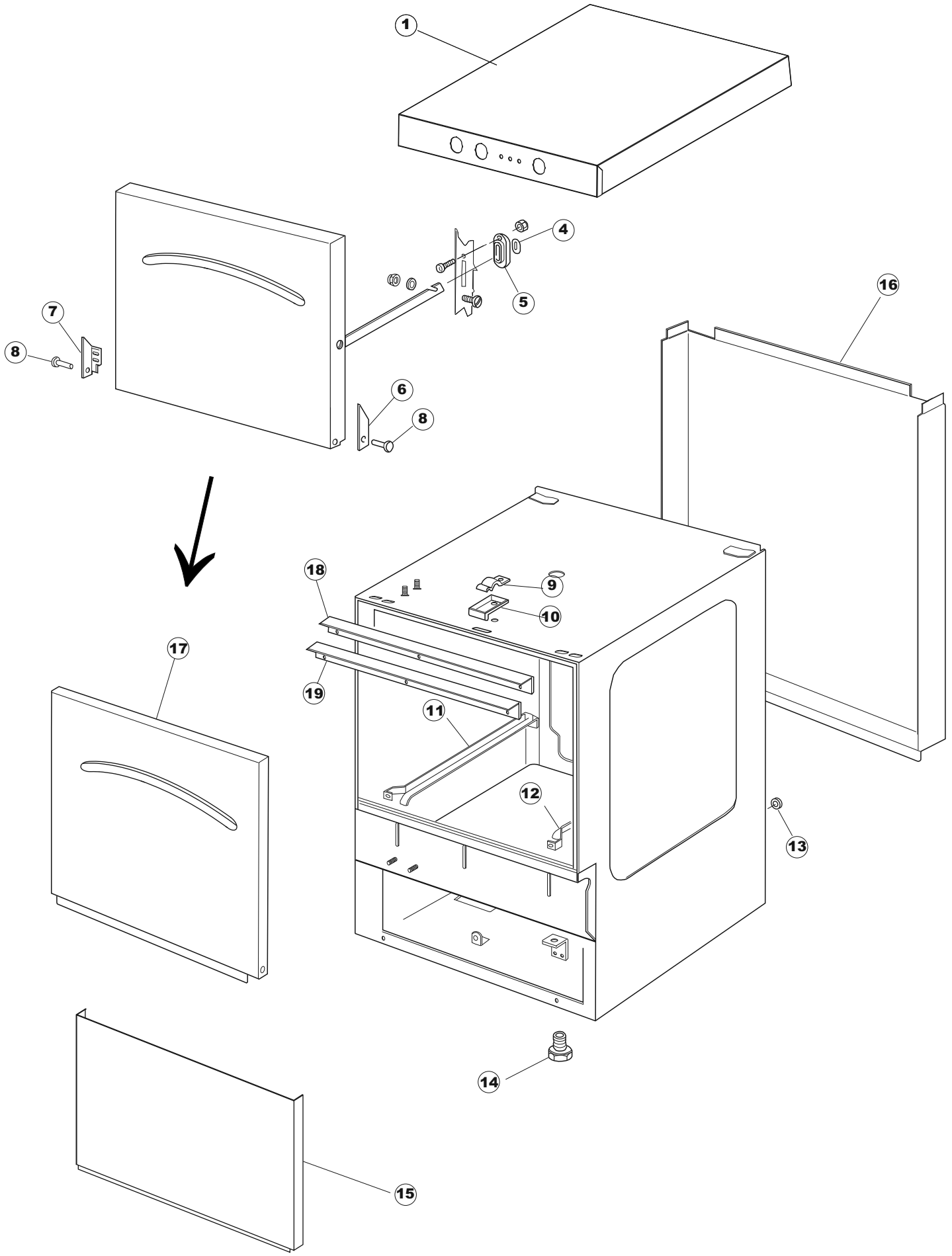

ELETTROBAR 570040 EXPLODED VIEW

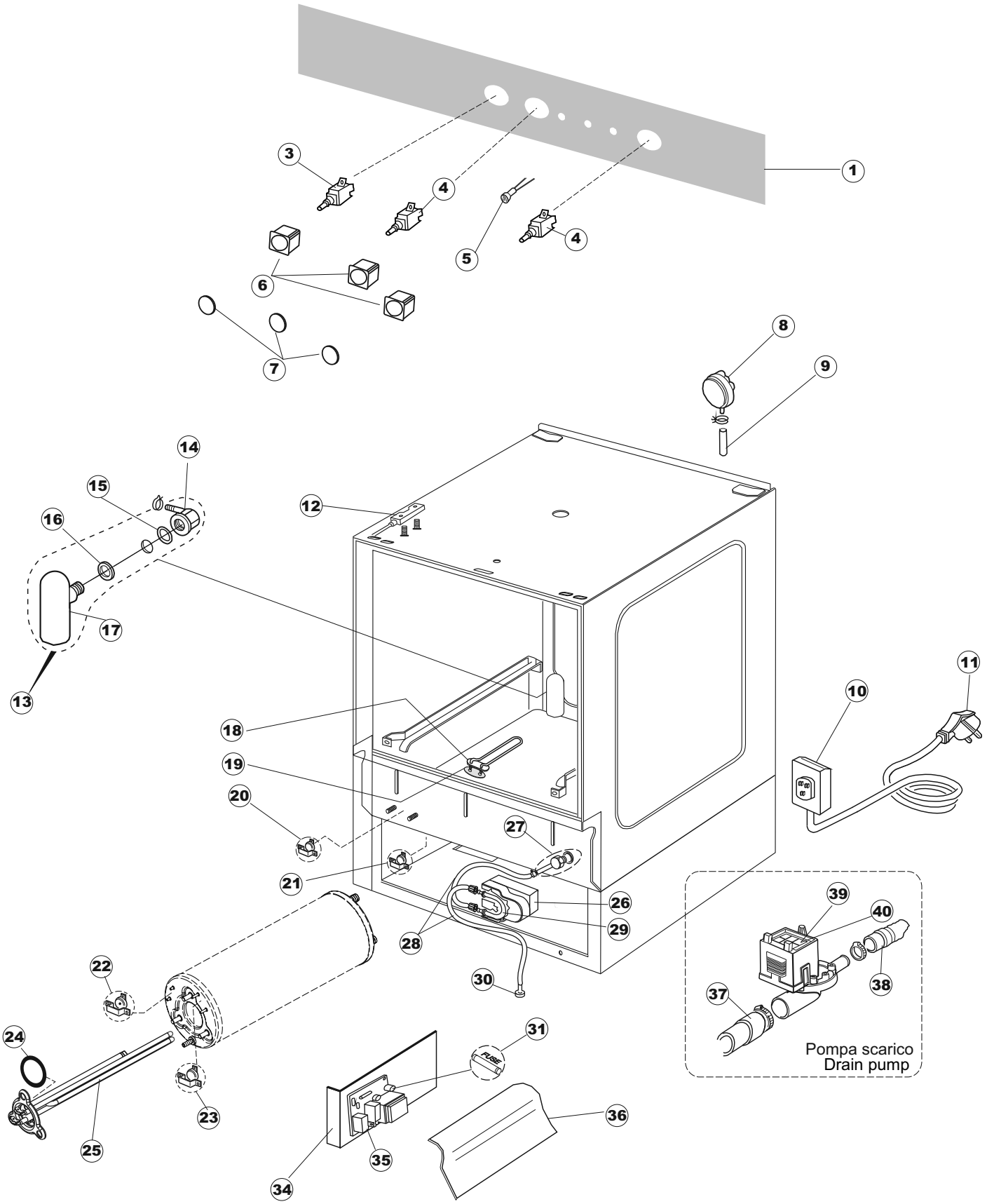

E3 ELETTROBAR 570040 EXPLODED VIEW

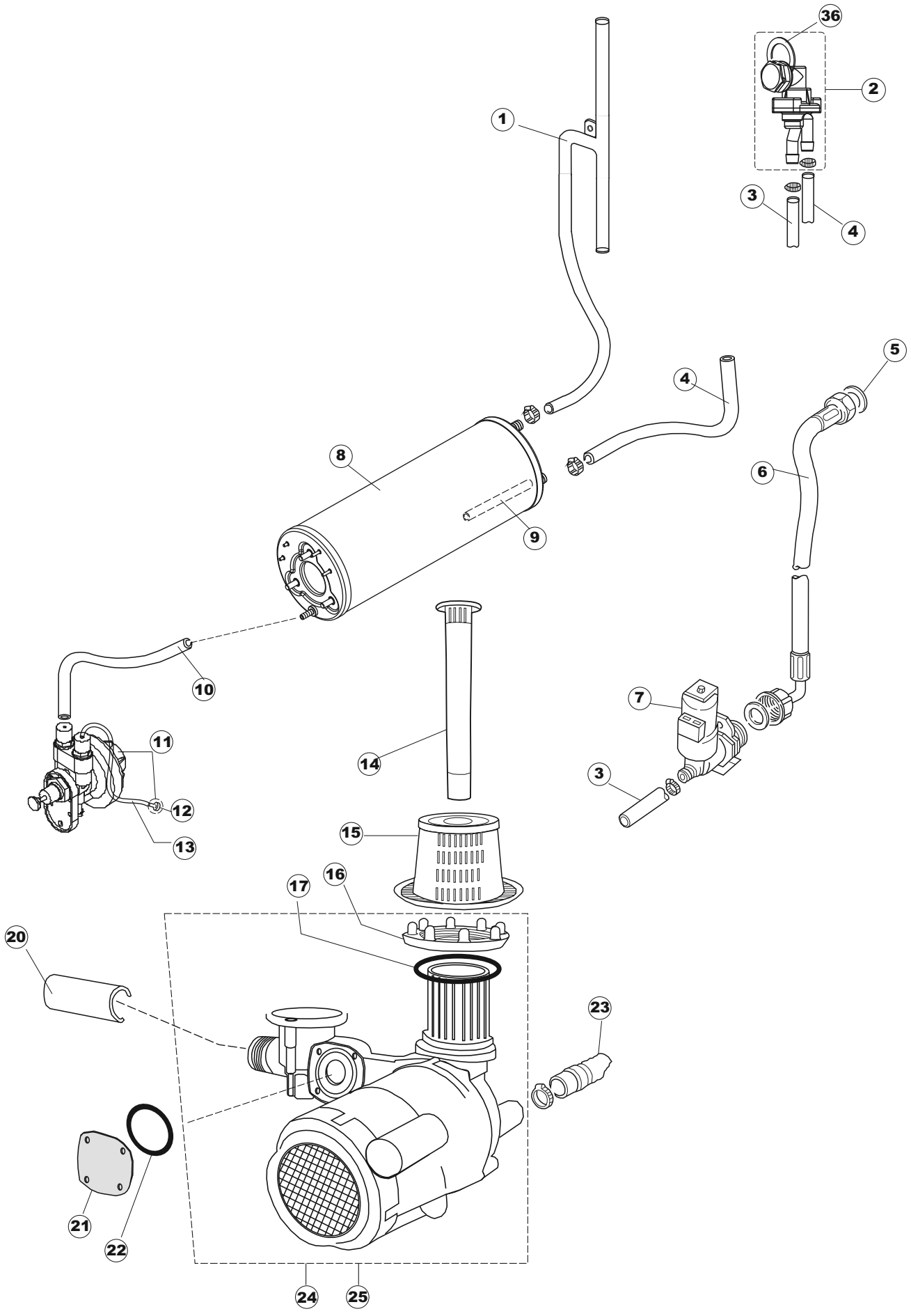

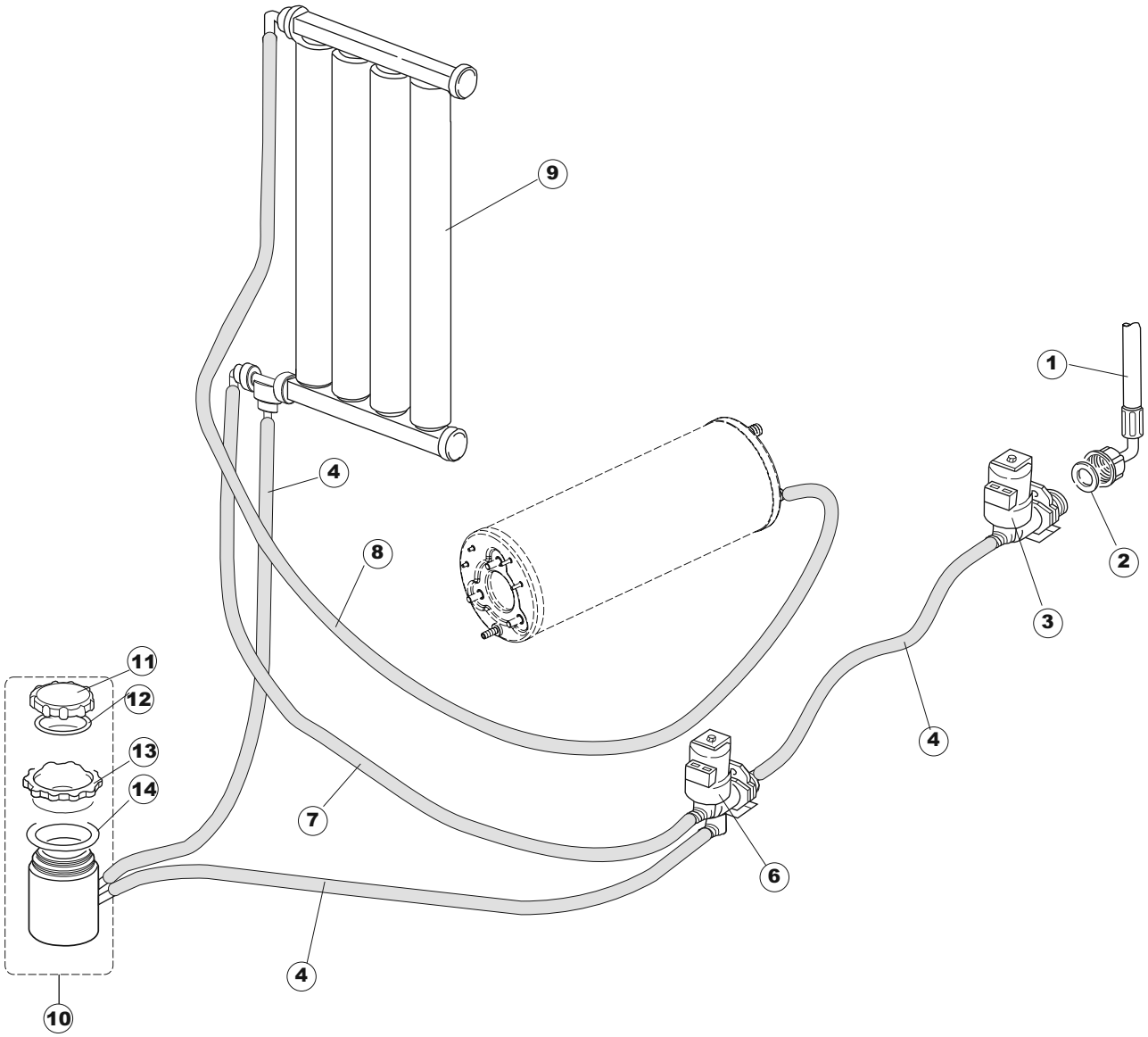
9
1
4
2
8
3
11
12
4
13
14
7
6
4
10

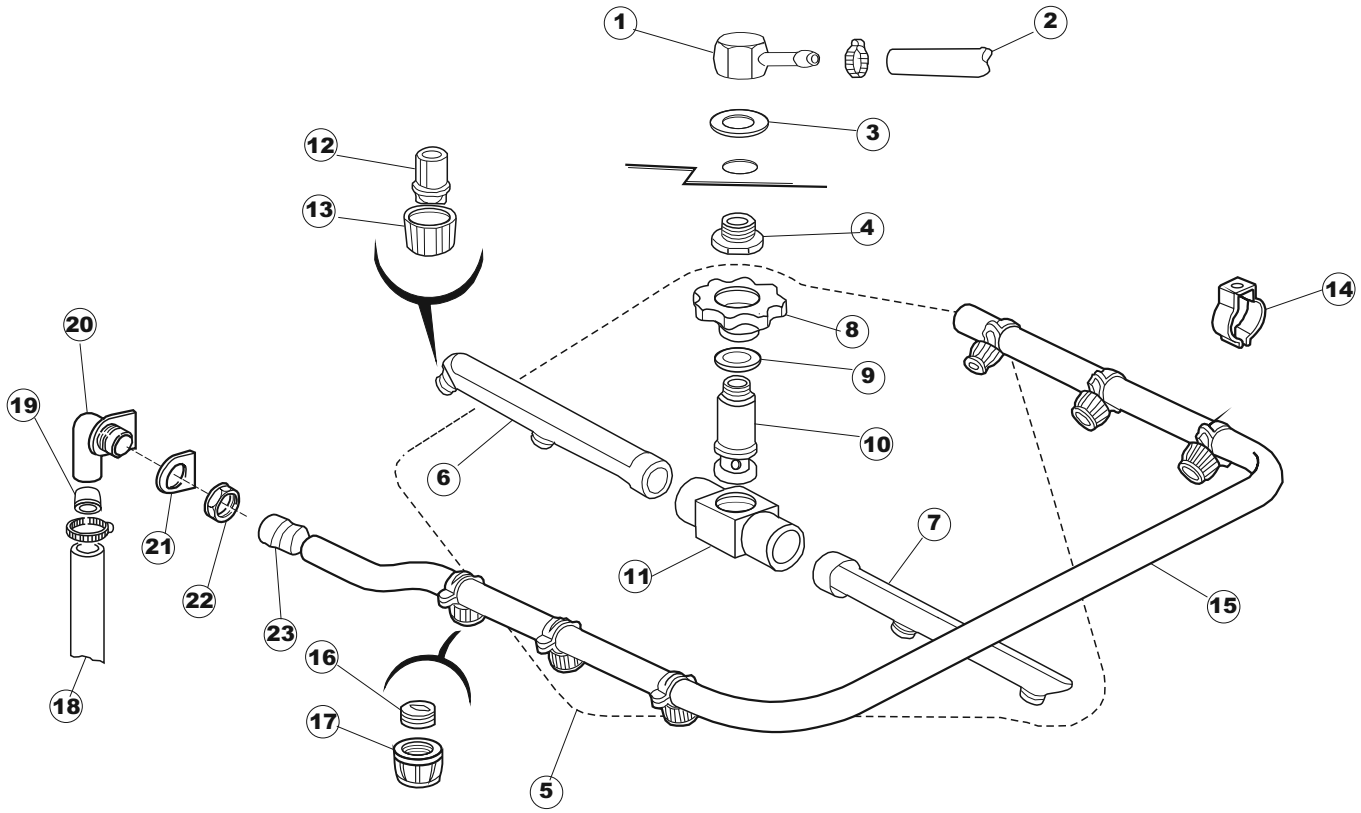
1
2
3
12
13
4
14
20
8
19
9
10
6
21
7
22
11
15
23
16
18
17
5

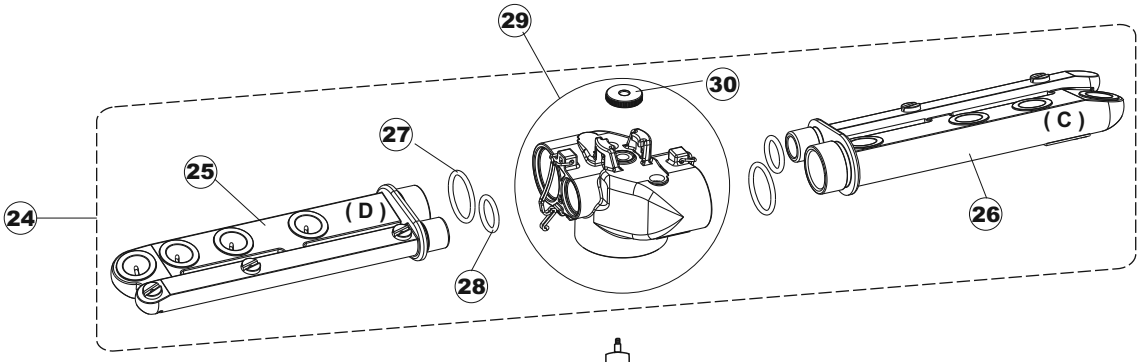
29
30
27
25
(D)
(C)
24
26
28

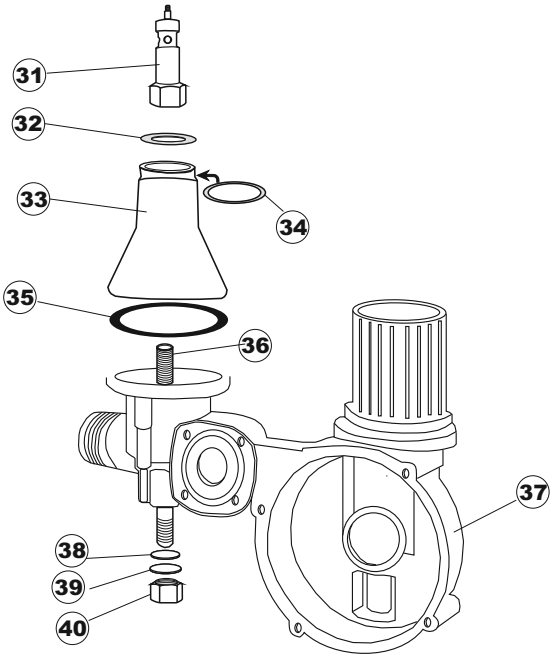
31
32
33
34
35
36
37
38
39
40

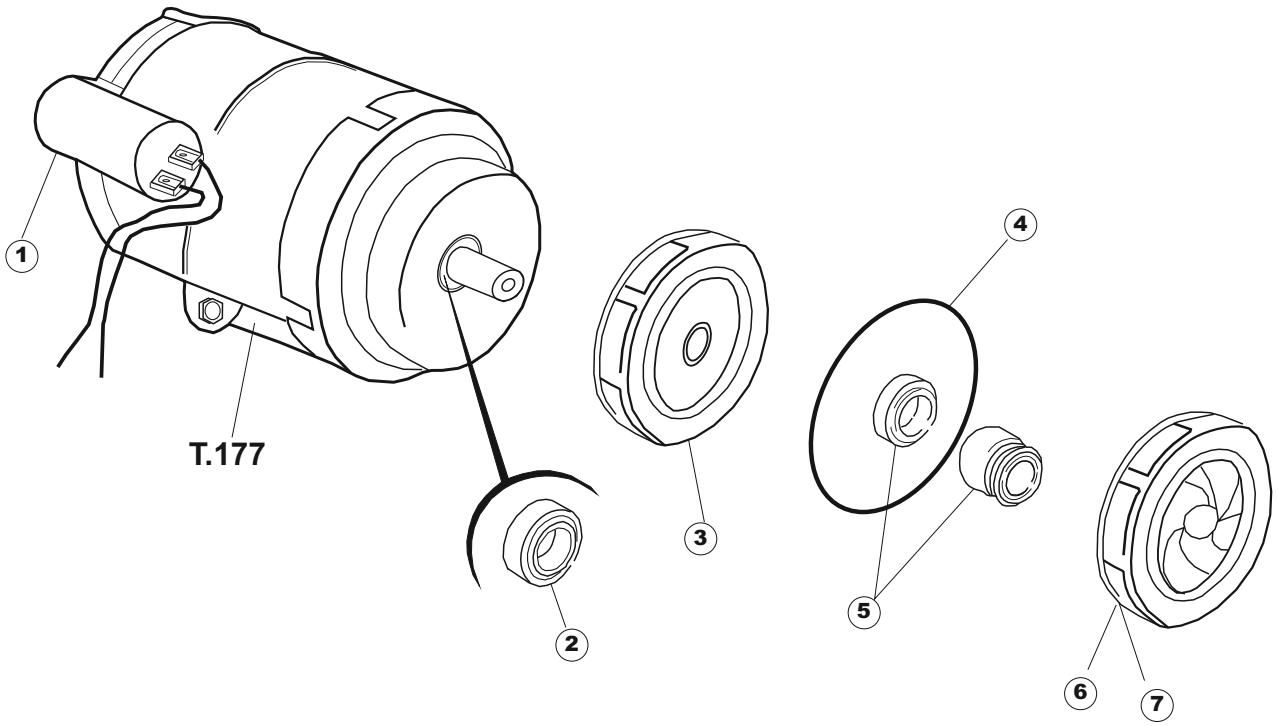
1
T.177
2
3
4
5
6
7