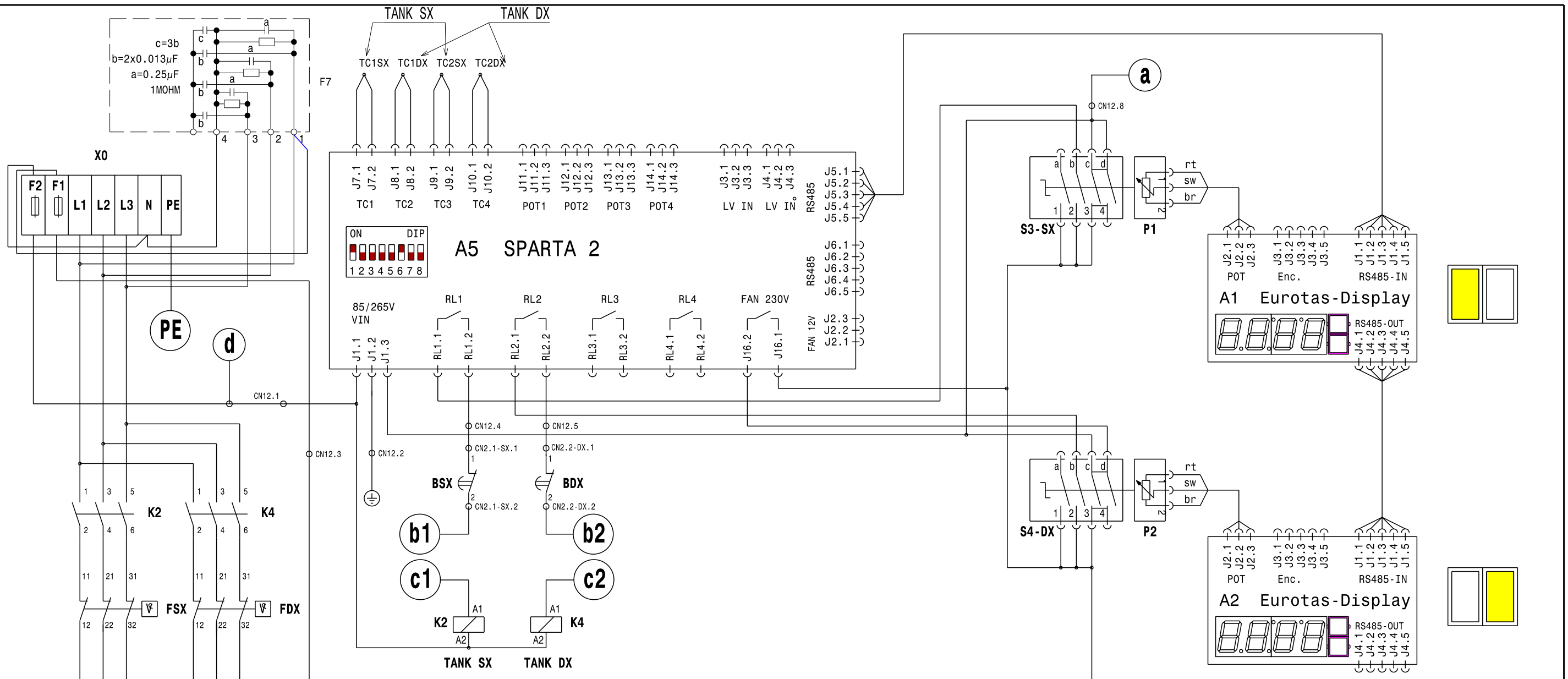

	5+5 lt.		
P	6.0+6.0		kW
I	15.3	16.7	A
U	380	415	V

	10+10 lt.		
P	12.0+12.0		kW
I	30.6	33.4	A
U	380	415	V

Common Partlists	
A1/2	Eurotas Display (left/right)
A5	Control unit SPARTA
TC2SX/TC2DX	Thermocouple K type - level (left/right)
TC1SX/TC1DX	Thermocouple K type - work (left/right)
E1-SX/E2-DX	Heating Elements (left/right)
F1/2	Fuse auxiliary 1.5AT
FSX/FDX	Safety therm. 259°C (left/right heat.el.)
K2/4	Working Contactor (left/right heat. el.)
BSX/BDX	Microswitch (left/right heat. el.)
P1/2	Potentiometer 10kohm (left/right)
S3-SX/S4-DX	Switch (left tank/right tank)
X0	Mainterminal
F7	EMC FILTER
Oil pump filtering	
F3/F4	Fuse 1.5AT
S1-SX/S2-DX	Activation pump switch (left/right)
T1	Power supply 24Vdc
M1-SX/M2-SX	Oil pump (left/right)

OIL PUMP FOR FILTERING

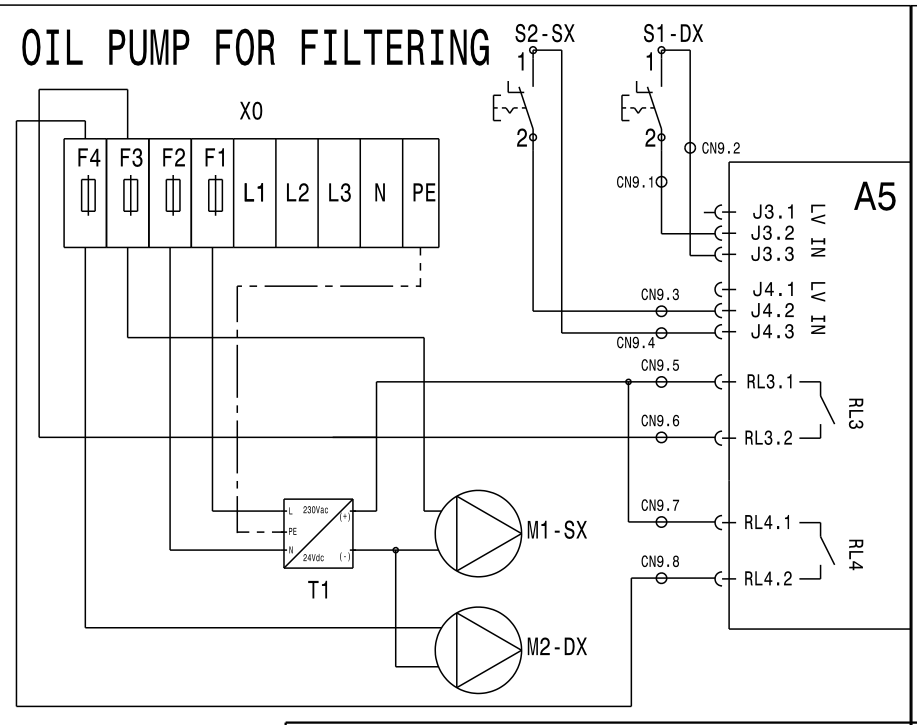

ENERGY OPTIMIZER

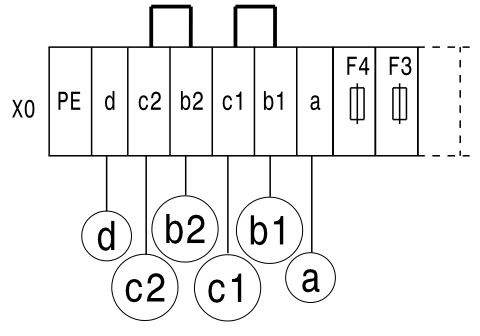

NOTE:
1) PE TERMINAL BLOCK IS ALREADY CONNECT TO THE GROUND
2) THE JUMP CONNECTION BETWEEN b1/c1 AND b2/c2 IS ALWAYS PRESENT
3) TO CONNECT EXTERNAL ENERGY OPTIMIZER REMOVE JUMPER b1/c1 FOR SINGLE TANK AND ALSO b2/c2 FOR SECOND TANK IF IS PRESENT AND CONNECT THE CABLE FOLLOWIN NORMS DIN 18875

SCHEMA ELETTRICO FRYER 5+5/10+10 LT (E-XP)	From S/N :	N°: 60289BL00