Fryers

Optioil 400/800 mm

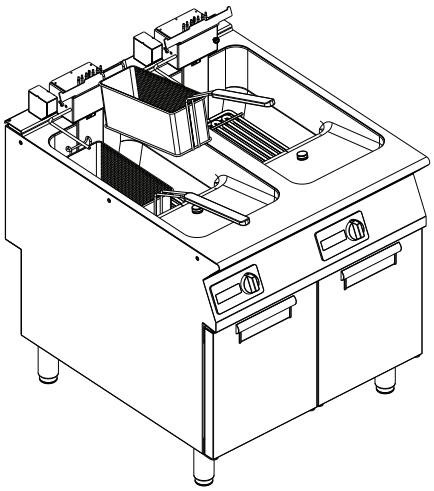

EN Installation and operating manual *

*Original instructions

59589JH00- 2026.04

Foreword

 Read the following instructions, including the warranty terms before installing and using the appliance.

Visit our website www.electroluxprofessional.com and open the Support section to:

 Register your product

 Get hints & tips of your product, service and repair information

The installation, use and maintenance manual (hereinafter Manual) provides the user with information necessary for correct and safe use of the appliance.

The following must not be considered a long and exacting list of warnings, but rather a set of instructions suitable for improving appliance performance in every respect and, above all, preventing injury to persons and animals and damage to property due to improper operating procedures.

All persons involved in appliance transport, installation, commissioning, use and maintenance, repair and disassembly must consult and carefully read this manual before carrying out the various operations, in order to avoid wrong and improper actions that could compromise the appliance's integrity or endanger people. Make sure to periodically inform the user regarding the safety regulations. It is also important to instruct and update personnel authorised to operate on the appliance, regarding its use and maintenance.

The manual must be available to operators and carefully kept in the place where the appliance is used, so that it is always at hand for consultation in case of doubts or whenever required.

If, after reading this manual, there are still doubts regarding appliance use, do not hesitate to contact the Manufacturer or the authorised Service Centre to receive prompt and precise assistance for better operation and maximum efficiency of the appliance. During all stages of appliance use, always respect the current regulations on safety, work hygiene and environmental protection. It is the user's responsibility to make sure the appliance is started and operated only in optimum conditions of safety for people, animals and property.



IMPORTANT

- The manufacturer declines any liability for operations carried out on the appliance without respecting the instructions given in this manual.
- The manufacturer reserves the right to modify the appliances presented in this publication without notice.
- No part of this manual may be reproduced.
- This manual is available in digital format by:
  - contacting the dealer or reference customer care;
  - downloading the latest and up to date manual on the web site www.electroluxprofessional.com;
- The manual must always be kept in an easily accessed place near the appliance. Appliance operators and maintenance personnel must be able to easily find and consult it at any time.

Contents

A WARNING AND SAFETY INFORMATION 5
A.1 General information 5
A.2 Personal protection equipment 5
A.3 General safety 6
A.4 Protection devices installed on the appliance 6
A.5 Safety signs to be placed on the appliance or near its area 7
A.6 Reasonably foreseeable improper use 7
A.7 Residual risks 7
A.8 Transport, handling and storage 8
A.9 Installation and assembly 8
A.10 Electrical connection 8
A.11 Positioning 8
A.12 Appliance space limitations 8
A.13 Appliance cleaning 8
A.14 Preventive Maintenance 9
A.15 Parts and accessories 9
A.16 Precautions for use and maintenance 9
A.17 Appliance maintenance 9
A.18 Appliance disposal 9
B WARRANTY TERMS AND EXCLUSIONS 9
C TECHNICAL DATA 10
C.1 Dataplate position 10
C.2 Appliance and manufacturer's identification data 10
C.3 Electrical models 11
D GENERAL INFORMATION 11
D.1 Introduction 11
D.2 Intended use and restrictions 11
D.3 Testing and inspection 11
D.4 Copyright 11
D.5 Keeping the manual 11
D.6 Recipients of the manual 11
D.7 Definitions 11
D.8 Responsibility 12
D.9 Customer packaging checks 12
D.10 Storage 12
E INSTALLATION AND ASSEMBLY 12
E.1 Introduction 12
E.2 Customer's responsibilities 12
E.3 Unpacking instructions 12
E.4 Disposal of packing 12
E.5 Joining Appliances 13
E.5.1 Installation On Bridge, Cantilever Frame Or Cement Plinth (depending on the appliance and/or model) 13
E.5.2 Sealing Gaps Between Appliances 13
E.6 Floor fixing (depending on the appliance and/or model) 13
E.7 Electrical connection 13
E.7.1 Electrical appliances 13
E.8 Power cable 13
E.9 Circuit breaker 14
E.10 Equipotential node and Earth connection 14
E.11 Safety thermostat 14
E.12 Fuse replacement 14
F NORMAL APPLIANCE USE 14
F.1 Characteristics of personnel enabled to operate on the appliance 14
F.2 Basic requirements for appliance use 14
G INSTRUCTION FOR THE USER 14
G.1 Fryer use 14
G.2 Basket capacity 15
G.3 Display 15
G.4 Temperature control 16
G.5 First use 16
G.6 Filling up the tank 16
G.7 Electrical models 16
G.8 Oil filtering 16
G.9 Standby / Melting 17
G.10 Oil level detection 17
G.11 Draining oil 17
H APPLIANCE CLEANING AND MAINTENANCE 17
H.1 Care information 17
H.2 Cleaning introduction 18
H.3 Maintenance intervals 18
H.4 Periods of non-use 18

H.5 External parts 19
H.6 Other surfaces 19
H.7 Filters 19
H.8 Appliance's tank, baskets and utensils cleaning 19
H.9 Internal parts (every 6 months) 20
I TROUBLESHOOTING 20
I.1 Introduction 20
I.2 Warnings codes 20
J APPLIANCE DISPOSAL 20
J.1 Appliance recyclability and disposal 20
J.1.1 Recyclability 20
J.1.2 Procedure regarding appliance disposal and component / material recovery 20

A WARNING AND SAFETY INFORMATION

A.1 General information

To ensure safe use of the appliance and a proper understanding of the manual it is necessary to be familiar with the terms and typographical conventions used in the documentation. The following symbols are used in the manual to indicate and identify the various types of hazards:

WARNING
Danger for the health and safety of operators.

WARNING
Danger of electrocution - dangerous voltage.

CAUTION
Risk of damage to the appliance or the product.

IMPORTANT
Important instructions or information on the product

Equipotentiality

Read the instructions before using the appliance

Clarifications and explanations

- Only specialised personnel are authorised to operate on the appliance.
- This appliance is to be intended for commercial and collective use, for example in kitchens of restaurants, canteens, hospitals and in commercial enterprises such as bakeries, butcheries, etc., not for continuous mass production of food. Any other use is deemed improper.
- This appliance is intended to be used in professional areas (eg. bar, canteen, etc) by an operator for normal appliance use.
- This appliance must not be used by minors and adults with limited physical, sensory or mental abilities or without adequate experience and knowledge regarding its use.
- Do not let children play with the appliance.
- Keep all packaging and detergents away from children.
- Cleaning and user maintenance shall not be made by children without supervision.
- For your safety do not store or use gasoline or other flammable materials, vapours and liquids in the vicinity of this or any other appliance.
- Do not store explosive substances, such as pressurized containers with flammable propellant, in this appliance.
- Refer to the data given on the appliance's data plate for relations with the Manufacturer (e.g. when ordering spare parts, etc.).
- When scrapping the appliance, the marking CE must be destroyed.
- Save these instructions carefully for further consultation by the various operators.

A.2 Personal protection equipment

Summary table of the Personal Protection Equipment (PPE) to be used during the various stages of the appliance's service life.

Stage	Protective garments	Safety footwear	Gloves	Glasses	Safety helmet
Transport	—	●	○	—	○
Handling	—	●	○	—	—
Unpacking	—	●	○	—	—
Installation	—	●	●[1]	—	—
Normal use	●	●	●[2]	—	—
Adjustments	○	●	—	—	—
Routine cleaning	○	●	●[1–3]	○	—
Extraordinary cleaning	○	●	●[1–3]	○	—
Maintenance	○	●	○	—	—

Stage	Protective garments	Safety footwear	Gloves	Glasses	Safety helmet
Dismantling	○	●	○	○	—
Scrapping	○	●	○	○	—
Key:					
●	**PPE REQUIRED**				
○	**PPE AVAILABLE OR TO BE USED IF NECESSARY**				
—	**PPE NOT REQUIRED**				

1. During these operations, gloves must be cut-resistant. Failure to use the personal protection equipment by operators, specialized personnel or users can involve exposure to harm to health (depending on the model).
2. During these operations, gloves must be heatproof to protect hands from contact with hot food or hot parts of the appliance and/or when removing hot items from it. Failure to use the personal protection equipment by operators, specialised personnel or users can involve exposure to chemical risk and cause possible harm to health (depending on the model).
3. During these operations, gloves must be suitable for contact with chemical substances used (refer to the safety data sheet of the substances used for information regarding the required PPE). Failure to use the personal protection equipment by operators, specialized personnel or users can involve exposure to chemical risk and cause possible harm to health (depending on the model).

A.3 General safety

- The appliances are provided with electric and/or mechanical safety devices for protecting workers and the appliance itself.
- Never operate the appliance, removing, modifying or tampering with the guards, protection or safety devices.
- Do not make any modifications to the parts supplied with the appliance.
- Several illustrations in the manual show the appliance, or parts of it, without guards or with guards removed. This is purely for explanatory purposes. Do not use the appliance without the guards or with the protection devices deactivated.


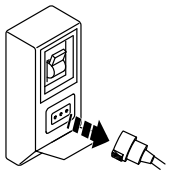
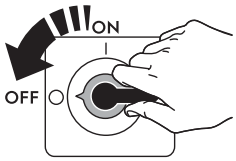

Disconnect the appliance from the power supply before carrying out any installation, assembly, cleaning or maintenance procedure.

- Do not remove, tamper with or make illegible the CE marking, the safety, danger and instruction signs and labels on the appliance.
- The A-weighted emission sound pressure level does not exceed 70 dB(A).
- Do not use products (even if diluted) containing chlorine (sodium hypochlorite, hydrochloric or muriatic acid, etc.) to clean the appliance or the floor under it.
- Do not spray aerosols in the vicinity of this appliance while it is in operation.
- Install the appliance under conditions of adequate ventilation in order to provide a suitable air change per hour. Make sure that the ventilation system, whatever it is, always remains operational and efficient for the entire period of time during which the equipment is operating.
- The following operations have to be carried out by specialised authorised personnel or Customer Care Service provided with all the appropriate personal protection equipment (A.2 *Personal protection equipment*), tools, utensils and ancillary means, who can ask the manufacturer to supply a servicing manual:
  - Installation and assembly
  - Positioning
  - Electrical connection
  - Appliance cleaning, repair and extraordinary maintenance
  - Appliance disposal
  - Work on electrical equipment

A.4 Protection devices installed on the appliance

Guards

The appliance has:

- fixed guards (e.g. casings, covers, side panels, etc.), fixed to the appliance and/or frame with screws or quick-release connectors that can only be removed or opened with tools; therefore the user must not remove or tamper with such devices. The Manufacturer declines any liability for damage due to tampering or their non-use;
- interlocked movable guards (door) for access inside the appliance;
- appliance electrical equipment access panels or doors, made from hinged panels openable with tools. The panel or the door must not be opened when the appliance is connected to the power supply.

A.5 Safety signs to be placed on the appliance or near its area

Prohibition	Meaning
	do not remove the safety devices
	do not use water to extinguish fires (placed on electrical parts)
	Keep the area around the appliance clear and free from combustible materials. Do not keep flammable materials in the vicinity of the appliance

Danger	Meaning
	caution hot surface
	danger of electrocution (shown on electrical parts with indication of voltage)

A.6 Reasonably foreseeable improper use

Improper use is any use different from that specified in this manual. During appliance operation, other types of work or activities deemed improper and that in general can involve risks for the safety of operators and damage to the appliance are not allowed. Reasonably foreseeable improper use includes:

- lack of appliance maintenance, cleaning and periodical checks;
- structural changes or modifications to the operating logic;
- tampering with the guards or safety devices;
- failure to use personal protection equipment by operators, specialised personnel and maintenance personnel;
- failure to use suitable accessories (e.g. use of unsuitable equipment or ladders);
- keeping combustible or flammable materials, or in any case materials not compatible with or pertinent to the work, near the appliance;
- wrong appliance installation;
- placing in the appliance any objects or things not compatible with its use, or that can damage the appliance, cause injury or pollute the environment;
- climbing on the appliance;
- non-compliance with the requirements for correct appliance use;
- other actions that give rise to risks not eliminable by the Manufacturer.

A.7 Residual risks

The appliance has several risks that were not completely eliminated from a design standpoint or with the installation of adequate protection devices. Nevertheless, through this manual the Manufacturer has taken steps to inform operators of such risks, carefully indicating the personal protection equipment to be used by them. In order to reduce the risks, provide for sufficient spaces while installing the unit.

To preserve these conditions, the areas around the appliance must always be:

- kept free of obstacles (e.g. ladders, tools, containers, boxes, etc.);
- clean and dry;
- well lit.

For the Customer's complete information, the residual risks remaining on the appliance are indicated below: such actions are deemed improper and therefore strictly forbidden.

Residual risk	Description of hazardous situation
Slipping or falling	The operator can slip due to water, any liquid or dirt on the floor
Burns/abrasions (e.g. heating elements, cold pan, cooling circuit plates and pipes)	The operator deliberately or unintentionally touches some components inside the appliance without using protective gloves.
Electrocution	Contact with live parts during maintenance operations carried out with the electrical panel powered
Crushing or injury	The specialised personnel may not correctly fix the control panel when accessing the technical compartment. The panel could close suddenly.

Residual risk	Description of hazardous situation
Tipping of loads	When handling the appliance or the packing containing it, using unsuitable lifting systems or accessories or with the unbalanced load
Chemical	Contact with chemical substances (e.g. detergent, rinse aid, scale remover, etc.) without taking adequate safety precautions. Therefore always refer to the safety cards and labels on the products used.
Sudden closure	The operator for normal appliance use could suddenly and deliberately close the lid/door/oven door (if present, depending on the appliance type).

A.8 Transport, handling and storage

- Transport (i.e. transfer of the appliance from one place to another) and handling (i.e. transfer inside workplaces) must occur with the use of special and adequate means.
- Please refer to indications on packaging for stackability during transport, handling and storage.
- Do not stand under suspended loads during loading or unloading operations. Unauthorized personnel must not enter the work area.
- The weight of the appliance alone is not sufficient to keep it steady.
- For appliance handling, do not lift and anchor it to movable or weak parts such as: casings, electrical raceways, pneumatic parts, etc.
- Do not push or pull the appliance to move it, as it may tip over. Use proper tool to lift the appliance.
- Arrange a suitable area with flat floor for appliance unloading and storage operations.
- Appliance transport, handling, shifting and storage personnel must be adequately instructed and trained regarding the safely use of lifting systems and personal protection equipment suitable for the type of operation carried out.
- When removing the anchoring systems, make sure the stability of the appliance parts does not depend on the anchoring and, therefore, that this operation does not cause the load to fall off the vehicle. Before unloading the appliance components, make sure all the anchoring systems are removed.

A.9 Installation and assembly

- The operations described must be carried out in compliance with the current safety regulations and provisions in force in the country of use.
- The plug, if present, must be accessible after positioning the appliance in the place of installation.
- The appliance is not suitable for installation outdoors and/or in places exposed to atmospheric agents (rain, direct sunlight, etc.).

A.10 Electrical connection

- The power supply system must be suitable for the rated current of the connected appliance; the connection must be carried out in compliance with the regulations and provisions in force in the country of use.
- The information regarding the appliance power supply voltage and frequency is given on the data plate.
- Install between the power cable and the electric line a differential thermal-magnetic switch suitable for the absorption specified on the data plate, with contact gap enabling complete disconnection in category III overvoltage conditions and complying with the regulations in force.
- If the power cable is damaged or too short, it must be replaced by the Customer Care Service or in any case by specialised personnel, in order to prevent any risk.
- The manufacturer declines any liability for damage or injury resulting from breach of the above rules or non-compliance with the electrical safety regulations in force in the country where the appliance is used.
- Verify that a safety circuit breaker is installed between the power cable of the appliance and the mains electric line. The contact opening max. distance and leakage current must comply with the local safety regulations.
- If present, connected the appliance to the equipotential protection circuit ⏚.

A.11 Positioning

- Install the appliances, taking all the safety precautions required for this type of operation, also respecting the relevant fire-prevention measures.
- Prevent the areas where the appliance is installed to be polluted with corrosive substances (chlorine, etc.). The manufacturer declines any liability for corrosive effects due to external causes.
- The appliance can be installed separately or combined only with other appliances of the same range.

A.12 Appliance space limitations

- The appliances are not suitable for recess-mounting. Leave a space of at least 100 between the appliance and side walls and 100 from the rear wall, or in any case an adequate space to enable subsequent servicing or maintenance operations.
- Maintain a distance of at least 200 mm between the appliance and any combustible walls.

A.13 Appliance cleaning

- Do not touch the appliance with wet hands or feet or when barefoot.
- Put the appliance in safe conditions before starting any cleaning operation.
- Do not allow oil or grease to come into contact with plastic parts. Do not allow dirt, fat, food or other residuals to form deposits on the appliance.
- Respect the requirements for the various routine and extraordinary maintenance operations. Non-compliance with the instructions can create risks for personnel.
- Do not spray water or use water jets, steam cleaner or high pressure cleaner.

A.14 Preventive Maintenance

In order to ensure the safety and performance of your equipment, it is recommended that service is undertaken by Electrolux Professional SpA authorised engineers every 12 months, in accordance with Electrolux Professional SpA Service Manuals. Please contact your local Electrolux Professional SpA Service Centre for further details.

A.15 Parts and accessories

Use only original accessories and/or spare parts. Failure to use original accessories and/or spare parts will invalidate the original manufacturer warranty and may render the appliance not compliant with the safety standard.

A.16 Precautions for use and maintenance

- Risks mainly of a mechanical, thermal and electrical nature exist in the appliance. Where possible the risks have been neutralised:
  - directly, by means of adequate design solutions.
  - indirectly by using guards, protection and safety devices.
- Any anomalous situations are signalled on the control panel display.
- During maintenance several risks remain, as these could not be eliminated, and must be neutralised by adopting specific measures and precautions.
- Do not carry out any checking, cleaning, repair or maintenance operations on moving parts. Workers must be informed of this prohibition by means of clearly visible signs.
- Make sure to periodically check correct operation of all the safety devices and the insulation of electrical cables, which must be replaced if damaged.

In case of a significant anomaly (e.g. short circuits, wires coming out of the terminal block, motor breakdowns, worn electrical cable sheathing, etc.) the operator for normal appliance use must:

- immediately deactivate the appliance and disconnect all the supplies (electricity, gas, water).

A.17 Appliance maintenance

- The inspection and maintenance intervals depend on the actual appliance operating conditions and ambient conditions (presence of dust, damp, etc.), therefore precise time intervals cannot be given. In any case, careful and periodical appliance maintenance is advisable in order to minimise service interruptions.
- It is advisable to stipulate a preventive and scheduled maintenance contract with the Customer Care Service.
- Put the appliance in safe conditions before starting any maintenance operation.
- To guarantee appliance efficiency and correct operation, periodical maintenance must be carried out according to the instructions given in the manual.

A.18 Appliance disposal

- Make the appliance unusable by removing the power cable and any compartment closing devices, to prevent the possibility of someone becoming trapped inside.

B WARRANTY TERMS AND EXCLUSIONS

If the purchase of this product includes warranty coverage, warranty is provided in line with local regulations and subject to the product being installed and used for the purposes as designed, and as described within the appropriate equipment documentation.

Warranty will be applicable where the customer has used only genuine spare parts and has performed maintenance in accordance with Electrolux Professional user and maintenance documentation made available in paper or electronic format.

Electrolux Professional strongly recommends using Electrolux Professional approved cleaning, rinse and descaling agents to obtain optimal results and maintain product efficiency over time.

The Electrolux Professional warranty does not cover:

- service trips cost to deliver and pick up the product;
- installation;
- training on how to use/operate;
- replacement (and/or supply) of wear and tear parts unless resulting from defects in materials or workmanship reported within one (1) week from the failure;
- correction of external wiring;
- correction of unauthorized repairs as well as any damages, failures and inefficiencies caused by and/or resulting from;
  - insufficient and/or abnormal capacity of the electrical systems (current/voltage/frequency, including spikes and/or outages);
  - inadequate or interrupted water supply, steam, air, gas (including impurities and/or other that does not comply with the technical requirements for each appliance);
  - plumbing parts, components or consumable cleaning products that are not approved by the manufacturer;
  - customer's negligence, misuse, abuse and/or non-compliance with the use and care instructions detailed within the appropriate equipment documentation;
  - improper or poor: installation, repair, maintenance (including tampering, modifications and repairs carried out by third parties not authorized) and modification of safety systems;
  - Use of non-original components (e. g.: consumables, wear and tear, or spare parts);
  - environment conditions provoking thermal (e. g. overheating/freezing) or chemical (e. g. corrosion/oxidation) stress;
  - foreign objects placed in- or connected to- the product;
  - accidents or force majeure;
  - transportation and handling, including scratches, dents, chips, and/or other damage to the finish of the product, unless such damage results from defects in materials or workmanship and is reported within one (1) week of delivery unless otherwise agreed;
- product with original serial numbers that have been removed, altered or cannot be readily determined;
- replacement of light bulbs, filters or any consumable parts;
- any accessories and software not approved or specified by Electrolux Professional.

Electrolux Professional warranty will be void and manufacturer shall have no liability related thereto in case of any modification of the product or related hardware/software/programming.

Warranty does not include scheduled maintenance activities (including the parts required for it) or the supply of cleaning agents unless specifically covered within any local agreement, subject to local terms and conditions.

Check on Electrolux Professional website the list of authorized customer care.

C TECHNICAL DATA

C.1 Dataplate position

IMPORTANT
This instruction manual contains information relevant to various appliances; see the dataplate to identify it.

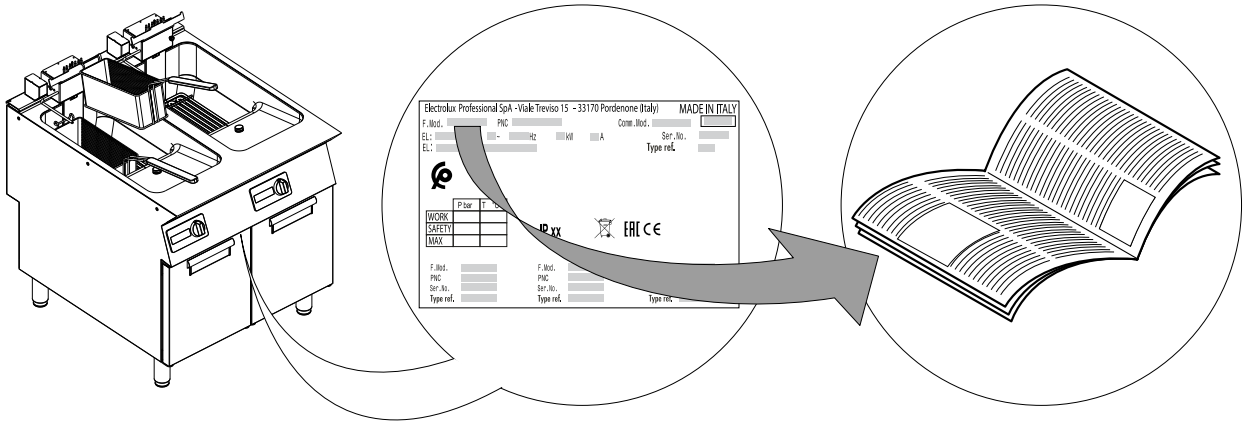

IMPORTANT
When installing the appliance, make sure the electrical connection is carried out in compliance with that specified on the data plate.

C.2 Appliance and manufacturer's identification data

The data plate gives the product identification and technical data.

An example of the marking or data plate on the appliance is given below:

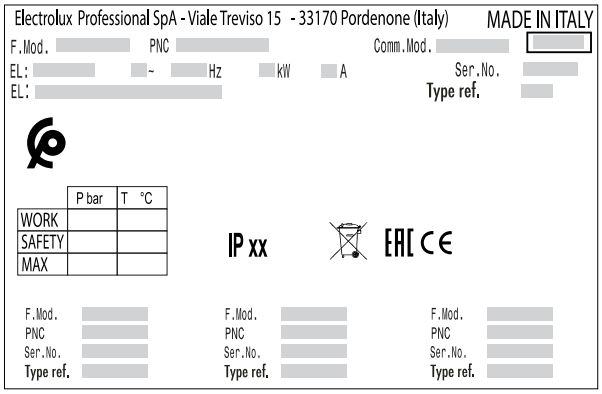

The meaning of the various information given on it is listed below:

F.Mod.	factory description of product
Comm.Mod.	commercial description
PNC	production number code
Ser.No.	serial number
Type ref.	certification group of the appliance
V	power supply voltage
Hz	power supply frequency
kW	power input
A	absorbed current
CE	CE marking
	WEEE symbol
IPX4	dust and water protection rating

C.3 Electrical models

TYPE	Tank capacity	Max. Power	Power supply cable section[1]
	Lt	kW	mm²
Range 700 400mm	5+5	12	2.5
Range 700 400mm	10	12	2.5
Range 700 800mm	10+10	24	6
Range 900 400mm	15	18	4
Range 900 800mm	15+15	36	10

1. minimum recommended

D GENERAL INFORMATION

WARNING
Refer to "*Warning and Safety Information*".

D.1 Introduction

This manual contains information relevant to various appliances. The product images in this guide are only an example.

The drawings and diagrams given in the manual are not in scale. They supplement the written information with an outline, but are not intended to be a detailed representation of the appliance supplied.

The numerical values given on the appliance installation diagrams refer to measurements in millimeters and/or inches.

D.2 Intended use and restrictions

This appliance is designed for cooking food. It is intended for collective use.

Any other use is deemed improper.

NOTE!
The manufacturer declines any liability for improper use of the product.

D.3 Testing and inspection

Our appliances have been designed and optimized, with laboratory testing, in order to obtain high performance and efficiency.

Passing of the tests (visual inspection - gas/electrical test - functional test) is guaranteed and certified by the specific enclosures.

D.4 Copyright

This manual is intended solely for consultation by the operator and can only be given to third parties with the permission of Electrolux Professional SpA.

D.5 Keeping the manual

The manual must be carefully kept for the entire life of the appliance, until scrapping. The manual must stay with the appliance in case of transfer, sale, hire, granting of use or leasing.

D.6 Recipients of the manual

This manual is intended for:

- the carrier and handling personnel;
- installation and commissioning personnel;
- the employer of appliance users and the workplace manager;
- operators for normal appliance use;
- specialised personnel - Customer Care service (see service manual).

D.7 Definitions

Listed below are the definitions of the main terms used in the manual. It is advisable to read them carefully before use.

Operator	appliance installation, adjustment, use, maintenance, cleaning, repair and transport personnel.
Manufacturer	Electrolux Professional SpA or any other service centre authorised by Electrolux Professional SpA.
Operator for normal appliance use	an operator who has been informed and trained regarding the tasks and hazards involved in normal appliance use.
Customer Care service or specialised personnel	an operator instructed/trained by the Manufacturer and who, based on his professional and specific training, experience and knowledge of the accident-prevention regulations, is able to appraise the operations to be carried out on the appliance and recognise and prevent any risks. His professionalism covers the mechanical, electrotechnical and electronics fields etc.
Danger	source of possible injury or harm to health.
Hazardous situation	any situation where an operator is exposed to one or more hazards.
Risk	a combination of probabilities and risks of injury or harm to health in a hazardous situation.
Protection devices	safety measures consisting of the use of specific technical means (guards and safety devices) for protecting operators against risks.
Guard	an element of a appliance used in a specific way to provide protection by means of a physical barrier.
Safety device	a device (other than a guard) that eliminates or reduces the risk; it can be used alone or in combination with a guard.
Customer	the person who purchased the appliance and/or who manages and uses it (e. g. company, entrepreneur, firm).
Electrocution	an accidental discharge of electric current on a human body.

D.8 Responsibility

The Manufacturer declines any liability for damage and malfunctioning caused by:

- non-compliance with the instructions contained in this manual;
- repairs not carried out in a workmanlike fashion, and replacements with parts different from those specified in the spare parts catalogue (the fitting and use of non-original spare parts and accessories can negatively affect appliance operation and invalidates the original manufacturer warranty);
- operations carried out by non-specialised personnel;
- unauthorized modifications or operations;
- missing, lack or inadequate maintenance;
- improper appliance use;
- unforeseeable extraordinary events;
- use of the appliance by uninformed and / or untrained personnel;
- non-application of the current provisions in the country of use, concerning safety, hygiene and health in the workplace.

The Manufacturer declines any liability for:

- damage caused by arbitrary modifications and conversions carried out by the user or the Customer;
- inaccuracies contained in the manual, if due to printing or translation errors.

The employer, workplace manager or service technician are responsible for identifying and choosing adequate and suitable personal protection equipment to be worn by operators, in compliance with regulations in force in the country of use.

Any supplements to the installation, use and maintenance manual the Customer receives from the Manufacturer will form an integral part of the manual and therefore must be kept together with it.

D.9 Customer packaging checks

- The forwarder is responsible for the goods during transport and delivery.
- Make a complaint to the forwarder in case of visible or hidden damage.
- Specify any damage or shortages on the dispatch note.
- The driver must sign the dispatch note: the forwarder can reject the claim if the dispatch note is not signed (the forwarder can provide the necessary form).
- For hidden damage or shortages becoming apparent only after unpacking, request the forwarder for inspection of the goods within and no later than 15 days after delivery.

After packaging checks

1. Remove the packaging.
   Take care when unpacking and handling of the appliance to not cause any shocks on itself.
2. Keep all the documentation contained in the packaging.

D.10 Storage

The appliance and/or its parts must be stored and protected from damp, in a non-aggressive place, free of vibrations and with room temperatures between 5°C and 50°C.

The place where the appliance is stored must:

- can take the appliance load,
- have a flat support surface to avoid deforming the appliance or damage to the support feet.

E INSTALLATION AND ASSEMBLY

E.1 Introduction

WARNING
Refer to "*Warning and Safety Information*".

To ensure correct operation of the appliance and maintain safe conditions during use, carefully follow the instructions given in this chapter.

Check and, if necessary, level the appliance after positioning. Incorrect levelling can cause appliance malfunctioning.

CAUTION
Before moving the appliance make sure the load bearing capacity of the lifting equipment used is suitable for its weight.

E.2 Customer's responsibilities

The tasks and works required of the Customer are:

- check the floor planarity on which the appliance is placed;
- arrange an earthed power socket of suitable capacity for the input specified on the data plate;
- prearrange a high-sensitivity manual-reset magneto-thermal circuit-breaker;
- prearrange a device lockable in the open position for the connection to the power supply.

NOTE!
For information regarding the electrical connection, refer to "A.10 *Electrical connection*".

E.3 Unpacking instructions

Unpack the appliance carrying out the following operations:

- if present, cut the straps and remove the protective film, taking care not to scratch the surface if scissors or blades are used;
- if present, remove the cardboard top, the polystyrene corners and the vertical protection pieces;
- for appliances with stainless steel surfaces, remove the protective film very slowly without tearing it, to avoid leaving glue stuck to the surface;
- should this happen, remove the traces of glue with a non-corrosive solvent, rinsing it off and drying thoroughly;
- it is advisable to go over all the stainless steel surfaces with a rag soaked in paraffin oil in order to create a protective film.

E.4 Disposal of packing

The packing must be disposed of in compliance with the current regulations in the country where the appliance is used. All the packing materials are environmentally friendly.

They can be safely kept, recycled, or burned in an appropriate waste incineration plant. Recyclable plastic parts are marked as follows:

PE	**Polyethylene** • Outer wrapping • Instructions bag
PP	**Polypropylene** • Straps
PS	**Polystyrene foam** • Corner protectors

The parts in wood and cardboard can be disposed of, respecting the current regulations in the country where the appliance is used.

E.5 Joining Appliances

1. Undo the 4 fixing screws and remove the control panels of the appliances (Fig.1A);
2. Remove the fixing screw nearest the control panel, from each side to be joined (Fig.1B);
3. Bring the appliances together and turn the feet to level them until the tops match (Fig.1D);
4. Turn one of the two plates inside the appliances 180°C (Fig.1C);

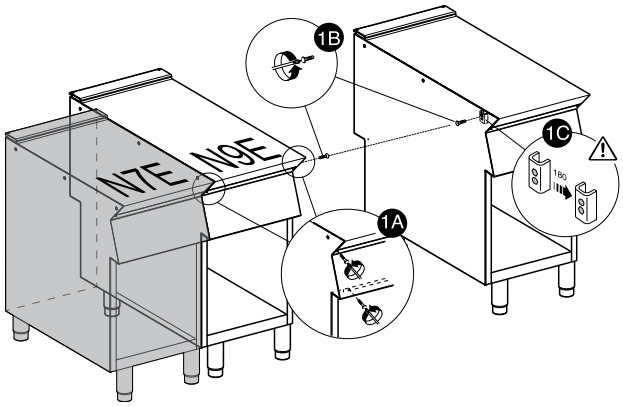

5. From inside the control panel of the same appliance, join them at the front side, screwing one M5x40 Hex Head screw (supplied) on the opposite insert (Fig.1E);
6. From the rear of the appliances, insert the coupling plate (provided) in the side slots on the back panels;
7. Secure the plate with two flat head M5 screws provided (Fig.1F).

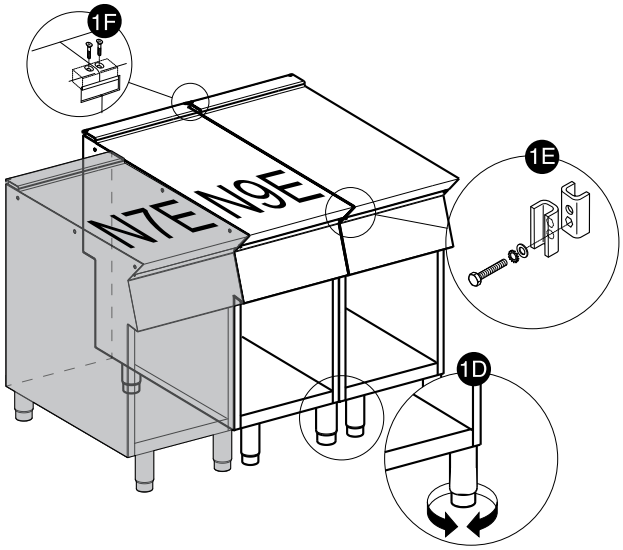

E.5.1 Installation On Bridge, Cantilever Frame Or Cement Plinth (depending on the appliance and/or model)

Carefully follow the instructions enclosed with the corresponding accessory. Follow the instructions supplied with the optional product chosen.

E.5.2 Sealing Gaps Between Appliances

Follow the instructions supplied with the optional sealing paste pack.

E.6 Floor fixing (depending on the appliance and/or model)

To avoid accidental tipping of built-in half-module appliances installed separately, fix them to the floor.

The instructions are enclosed with the corresponding accessory (F206136).

E.7 Electrical connection

WARNING

Work on the electrical systems must only be carried out by specialised personnel.

E.7.1 Electrical appliances

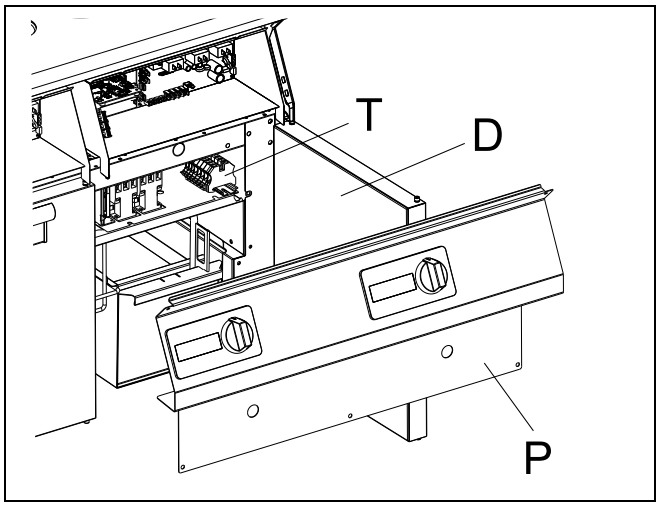

To access the terminal block:

The following procedure is valid for all appliance models.

1. Open the door “D“, remove the magnet, undo all the fixing screws and remove the front panel “P“;
2. connect the power cable to the terminal block “T“ as shown in the wiring diagram attached to the appliance;
3. secure the power cable with the cable clamp.

IMPORTANT
The manufacturer declines any liability if the safety regulations are not respected.

IMPORTANT
Only for 15 litres and 15+15 litres models
These appliances can be connected only to a supply with maximum system impedance no more than 0.369 Ω
In case necessary, please consult your supply authority for system impedance information.

E.8 Power cable

Unless otherwise specified, our appliances are not equipped with a power cable.

The installer must use a flexible cable having characteristics not lower than the H07RN-F rubber insulated type.

Protect the section of cable outside the appliance with a metal or rigid plastic tube.

WARNING

If the power cable is damaged, it must be replaced by the after-sales service or in any case by qualified personnel, in order prevent any risk

WARNING

The manufacturer declines any liability for damage or injury resulting from breach of the above rules or non-compliance with the electric safety regulation in force in the country where the machine is used

E.9 Circuit breaker

Verify that a safety circuit breaker is installed between the power cable of the appliance and the mains electric line.

The contact opening max. distance and leakage current must comply with the local safety regulations.

E.10 Equipotential node and Earth connection

Connect the appliance to an earth; it must be included in an equipotential node by means of the screw located under the frame.

The screw is marked with the symbol ⏚.

E.11 Safety thermostat

Appliances equipped with safety thermostat (overheating safety thermostat) that trips off automatically when temperatures exceed a set value, shutting off the electricity.

IMPORTANT

Resetting of the safety thermostat could be carried out by the user itself, pressing the button “B“ on the rear of the appliance (see fig. below).

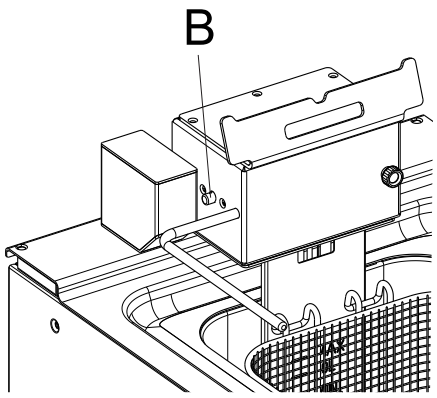

IMPORTANT

“Positive trip“ effect of the safety thermostat (used on some equipment type as per norms prescriptions) interrupts the unit operability (heating) even in case the capillary is cut.

Similar effect, but with no damage for the safety thermostat, can happen if the appliance body temperature drops below -10°C: in such cases, it is required to reset the safety thermostat while installing the appliance, hence before connecting it to the mains.

IMPORTANT

Only reset safety thermostat after disconnecting from the mains. Failure to disconnect from the mains causes the safety thermostat to brake and the unskilled person to risk electrocution.

Tampering with the safety thermostat invalidates the original manufacturer warranty.

E.12 Fuse replacement

The electrical system protection fuse is located inside the panel. To replace the fuse simply remove it from the terminal block.

F NORMAL APPLIANCE USE

WARNING

Refer to “*Warning and Safety Information*“.

F.1 Characteristics of personnel enabled to operate on the appliance

The Customer must make sure the personnel for normal appliance use are adequately trained and skilled in their duties.

The operator must:

- read and understand the manual;
- receive adequate training and instruction for their duties in order to operate safely;
- receive specific training for correct appliance use.

IMPORTANT

The Customer must make sure his personnel have understood the instructions received and in particular those regarding work hygiene and safety in use of the appliance.

F.2 Basic requirements for appliance use

- Knowledge of the technology and specific experience in operating the appliance.
- Adequate general basic education and technical knowledge for reading and understanding the contents of the manual, including correct interpretation of the drawings, signs and pictograms.
- Sufficient technical knowledge for safely performing his duties as specified in the manual.
- Knowledge of the regulations on work hygiene and safety.

G INSTRUCTION FOR THE USER

G.1 Fryer use

The appliance is intended for industrial use by trained personnel.

This appliance must only be used for its expressly designed purpose; i.e. for frying foods in oil or solid fat.

Any other use is considered improper.

General precautions

- Before introducing oil in the tank, make sure it does not contain water and is completely dry;

residual water in the tank may cause the oil to spit and can lead to serious injuries;

- pour the oil in the tank up to the maximum level indicated by the special reference notch situated on the rear wall of the tank;
- do not leave fat in the tank at the end of cooking;
- particularly bulky and wet foods can cause sprays of hot oil;
- place the basket with food to be cooked, slowly in the boiling oil, making sure that the froth formed does not spill over the edge of the tank;

  if this occurs, stop dipping the basket for a few seconds;
- after prolonged use the flash point of the oil/fat lowers and it is quicker to bubble up;
- overheated oil/fat can self-ignite; never put water on burning oil or fat but put out the flames with a lid or a damp cloth.

DANGER

Do not use exausted oil or fat cause due to a low flash point and easily reach boiling point.

WARNING

Top-up the oil bath whenever it falls below the minimum level, marked by the special reference notch “N“ (danger of fire).

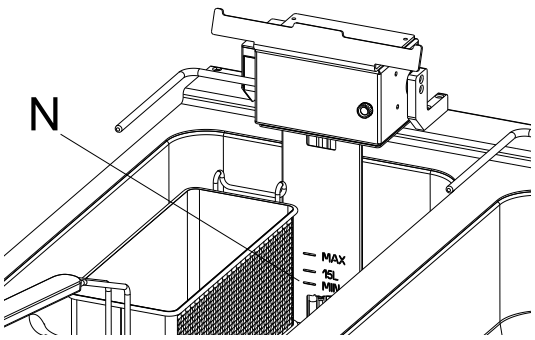

Tank emptying must be done when the oil is cold.

Heating many times the oil and reuse it, will knock down the burning oil point and increase the risk of fire.

The oil bath must be changed regularly, because when used several times it becomes dirty and has a lower flashpoint and an increased tendency to suddenly boil.

CAUTION

Tank emptying must be done when the oil is <90 ℃ cold.

CAUTION

Do not use the appliance for long periods when empty or in conditions that compromise its optimum efficiency.

FRYER TEMPERATURE SETTING	
Type of frying	**Set the temperature to:**
Foods that do not disperse pollutant substances in the oil	180℃ / 185℃
Breaded foods	175℃ / 180℃
Floured foods	170℃

NOTE!

For cooking food dipped in flour, set the temperature to 170 ℃.

A higher temperature doesn’t improve the cooking results, but cause faster deterioration of the oil (the residual flour in the oil tends to burn).

IMPORTANT

During cooking, manually remove any cooking residuals in the oil.

The prolonged presence of these residuals alters the taste and fragrance of the oil, reducing its useful life.

For a quick and good measurement of the degree of oil deterioration, use litmus paper (strips) available on the market.

G.2 Basket capacity

Tank capacity	Basket capacity	
	Fresh potatoes	Frozen potatoes
	Kg	
5+5 Lt	1+1	1+1
10 Lt	2	2
10+10 Lt	2+2	2+2
15 Lt	3	3
15+15 Lt	3+3	3+3

G.3 Display

All kind of appliances are equipped with a display.

Use the control knob to show the relevant settings in the display.



1. **GREEN LAMP**
   lights up when the appliance is switched on
2. **Digital display**
   shows the temperature, heat setting, functions or error messages
3. **ORANGE LAMP**
   lights up when the appliance is not ready yet to cook:

G.4 Temperature control

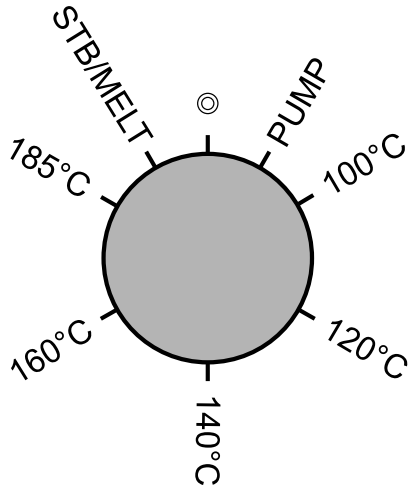

◎	“Off“
20°...45°:	“PUMP“
45°...65°:	“low saturation - 100°C “
65°...290°:	“temperature range between 100°C and 185°C“
290°...315°:	“high saturation - 185°C “
315°...340°:	stb / melt - standby or melt mode

G.5 First use

Clean off any industrial protection grease from all parts of the appliance and accessories before first use.

To properly perform basic cleaning, note and follow the instructions in H *Appliance cleaning and maintenance*.

1. Check that the tank’s drain valve is closed.
2. Fill up the tank to the max. level mark and add a non-foaming detergent suitable for use with food.
3. Place the baskets in the tank and let the water boil for a few minutes.
4. Switch off the appliance and let it cool down completely.
5. Empty the tank and rinse thoroughly with clean water.
6. Dry the machine. You can do this either manually with a cloth or allow to dry naturally.

G.6 Filling up the tank

IMPORTANT
Before filling the tank with oil, make sure that no water is present.

Fill with oil up to the maximum level mark.

Use the melt function to make sure any solid fat is liquefied:

- Chop up the solid fat block;
- Spread the pieces as evenly as possible in the tank;
- Set temperature control to melt ;
- Wait until the fat is completely melted.

G.7 Electrical models

5 / 10 / 15 Litres

Refer to G.4 *Temperature control*.

The control knob could rotate at 360° without blocking points. There are 2 physical steps for the STB/MELT and PUMP function, and a wide continuous area for the temperature set point.

Switching on

Turn on the main switch located ahead of the appliance.

- Once the tank is filled with oil and/or the solid fat is completely melted, it is possible to set the cooking temperature from 100 to 185°C.
- In the case of multiple deep frying pans, they can be individually controlled.

Switching off

- Rotate the control knob to “OFF“ position;
- with the appliance switched off, if the oil in the tank is above to 60°C the display show “HOT“ blinking label.

G.8 Oil filtering

Refer to G.4 *Temperature control* and see figures below.

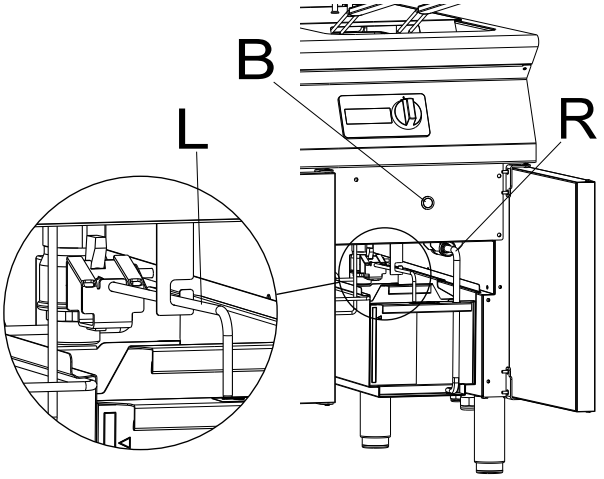

The oil filtering system allow to take the oil from the tank, filter it, and refill it again into the tank, in order to reuse the oil more times and have an economic saving.

IMPORTANT
To preserve the reliability of the pump, the oil temperature must be <160°C

To filter the oil follow the procedure below (valid for all kind of appliance version)

1. Extract the bucket “BU“ and check that it is completely empty;
2. **only for advanced oil filtration**: ensure that the paper support “SU“, new sheet paper “PA“ and presser “PR“ are correctly placed. Refer to image below;

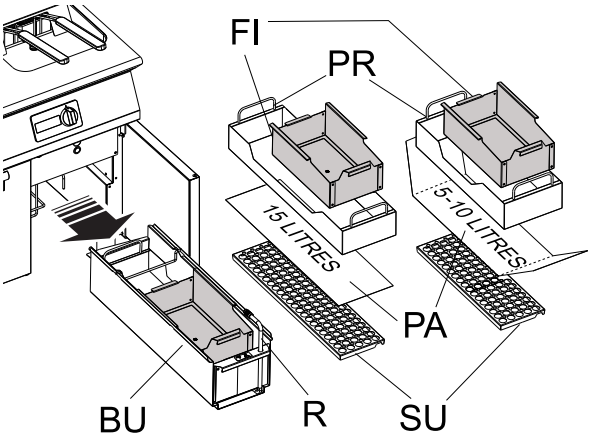

3. insert the bucket “BU“ and ensure that the steel mesh filter “FI“ is correctly placed under the drain;
4. check that the pipe “R“ is completely inserted into its housing;
5. rotate the control knob to “PUMP“ position;

WARNING
For your safety carry out this operation when the oil temperature is below 90°C.

6. turn the handle “L“ slowly clockwise to open the drain tap;

IMPORTANT
pay maximum attention to avoid contact with the hot oil;
the oil is quickly emptied through the drain;
the steel mesh filter ensures careful mechanical cleaning of the oil;

7. turn the handle “L“ anticlockwise to close the drain tap;
8. push the button “B“, otherwise the oil pump won’t start;
   the pump will operate for about 5 minutes; if the button will be pressed a second time for 1 second they stop, and the counter must be reset at 5 minutes.

IMPORTANT
With the control knob in “PUMP“ position:
   a. the heating elements are always “OFF“;
   b. the oil could be:
      - ≥160°C, then the display show “HOT“ blinking label;
      - <160°C, then the display show “PUMP“ fixed label.

9. check the oil in the bucket: if it isn’t empty push the button “B“ again;
10. at the end of the filtering procedure, check the oil level in the tank and if necessary refill it with fresh oil to the max level mark.
11. **Only for 2x5 litres version:**
    - Follow the previous procedure from “1“ to “3“;
    - then, to open the left or right drain tap, turn the relative handle slowly anticlockwise (left tap) or clockwise (right tap).
    - follow the rest of previous procedure from “5“ to “10“.

Replace the paper in the oil bucket

1. **The following procedure is valid for all kind of appliance version.**
   a. Extract the bucket “BU“ and check that it’s completely empty;
   b. extract the steel mesh filter “FI“;
   c. extract the presser “PR“;
   d. remove the used sheet of paper “PA“ and replace it with a new one;
   e. place the presser and the steel mesh filter into their housing;
   f. insert the bucket into the base.

G.9 Standby / Melting

Refer to G.4 *Temperature control*.

Rotating the control knob to “STBY/MELT“ position, 2 different functions can be activated:

- Melting.(“MELT“): if oil temperature <70°C
- Standby (“STBY“): if oil temperature ≥70°C

Melting

Melting is a “delicate“ cycle automatically run when switching the machine On.

It allows the fat (supposed to be solid at room temperature) to melt down and becoming liquid. The cycle lasts between 20 and 30 min, depending on the temperature and amount of fat to be melt down. It stops at 70°C

With “MELT“ function’s active:

- the oil temperature remains at 70°C;
- The display shows “MELT“ label.

Standby

With “STBY“ function’s active:

- the oil temperature remains at 120°C;
- the display shows the “STBY“ label.

Both of function remains active until any position change.

G.10 Oil level detection

Refer to G.4 *Temperature control*.

The oil level detection feature detect when the oil in the tank goes down under a specific level.

The feature is active when the appliance is in cooking position and set point is ≥ 150°C.

When the oil level goes down under the minimum mark, the appliance will continuos the normal functioning, according to the knob position, and visualise “FILL“ label on the display.

G.11 Draining oil

Refer to G.4 *Temperature control* and G.8 *Oil filtering*.

All versions and models

1. Check that the bucket is completely empty;
2. ensure that the bucket and filter are correctly placed under the drain;
3. rotate the control knob to “OFF“ position;

WARNING
For your safety carry out this operation when the oil temperature is below 90°C.

4. turn the handle “L“ slowly clockwise to open the drain tap;

IMPORTANT
pay maximum attention to avoid contact with the hot oil;
the oil is quickly emptied through the drain;
the steel mesh filter ensures careful mechanical cleaning of the oil;

5. pay maximum attention to avoid coming into contact with the hot oil;
6. close the drain tap by turning the relative knob.

NOTE!

Only for 2x5 litres version:

- Follow the previous procedure from “1“ to “3“;
- to open the left or right drain tap, turn the relative handle slowly anticlockwise (left tap) or clockwise (right tap).
- follow the rest of previous procedure from “5“ to “6“.

H APPLIANCE CLEANING AND MAINTENANCE

WARNING
Refer to “*Warning and Safety Information*“.

H.1 Care information

Care operations have to be carried out by the owner and/or user of the appliance.

IMPORTANT
Problems resulting from poor or lack of care as hereinafter described will not be covered by the warranty.

H.2 Cleaning introduction

To help reduce environmental impact, we recommend using Electrolux Professional cleaning products designed with sustainability and biodegradability in mind.

Use Electrolux Professional detergents as mentioned below if necessary, and a Microfibre[1] cloth for cleaning stainless steel surfaces or Brush[2].

If another type of detergent is used, carefully follow the producer's instructions and observe the safety rules given in the information sheets provided with the product or substance.

Rinse and dry thoroughly.

CAUTION

- Do not use solvent-based detergents (e. g. trichloro-ethylene) or abrasive powders for cleaning.
- Do not use steel brushes, steel wool, copper cloths, sand-based or similar products for cleaning.

Accessories such as baskets and containers, if present, must be cleaned outside of the appliance.

WARNING
When using chemicals, comply with the safety notes and dosage recommendations printed on the packaging. Refer to the chapter A.2 *Personal protection equipment* for handling chemical products.

H.3 Maintenance intervals

It is advisable to carry out the checks with the frequency given in the following table:

Maintenance, inspections, checks and cleaning	Frequency	Responsability
Ordinary cleaning • general cleaning of appliance and surrounding area	• Daily	• Operator
Mechanical protection devices • check their condition and for any deformation, loosening or removed parts	• Every 6 months	• Service
Control • check the mechanical parts, for cracks or deformations, tightening of screws: check the readability and condition of words, stickers and symbols and restore if necessary	• Yearly	• Service
Appliance structure • tightening of main bolts (screws, fixing systems, etc.) of appliance	• Yearly	• Service
Safety signs • check the readability and condition of safety signs	• Yearly	• Service
Electrical control panel • check the electrical components installed inside the electrical control panel. Check the wiring between the electrical panel and appliance parts	• Yearly	• Service
Electrical connection cable • check the connection cable (replace if necessary)	• Yearly	• Service
General appliance overhaul • check all components, electrical equipment, corrosion, pipes…	Every 10 years[1]	• Service

1. The appliance is designed and built for a duration of about 10 years. After this period of time (from commissioning) the appliance must undergo a general inspection and overhaul.

H.4 Periods of non-use

If the appliance is not going to be used for some time, take the following precautions:

- close the water supply tap(s), if present;
- disconnect the power supply or remove the plug from the power socket, if present;
- clean the cabinet, going over all the stainless steel surfaces vigorously with a rag moistened with paraffin oil to create a protective film;

1. You can order it with this reference code 0S1779.
2. You can order it with this reference code 095782.

- leave the door or drawers, if present, open so that air can circulate inside, preventing the formation of unpleasant odours;
- for the electric heated models: switch on the appliance at the minimum rate of heat for at least 45 minutes; this will allow moisture/humidity accumulated into the heating elements to evaporate without damaging the elements;
- periodically air the premises.

H.5 External parts

SATIN-FINISH STEEL SURFACES (daily)

- First clean all steel surfaces with S05 multipurpose degreaser, then finish with S01 stainless steel surface polisher[3]: dirt is easily removed when it has just formed;
- Remove grime, fat and other cooking residuals from steel surfaces when cool using water and S05 Multipurpose degreaser and a cloth or sponge; dry the surfaces thoroughly after cleaning.

  Dry the surfaces thoroughly after cleaning.
- In case of encrusted grime, fat or food residuals, go over with a cloth or sponge, wipe in the direction of the satin finish and rinse often:

  Rubbing in a circular motion combined with the particles of dirt on the cloth/sponge could spoil the steel's satin finish.
- Metal objects can spoil or damage the steel: damaged surfaces become dirty more easily and are more subject to corrosion.
- Restore the satin finish using S01 stainless steel surface polisher[3] if necessary .

IMPORTANT
It is recommended to avoid contact between S01 Stainless Steel Surfaces Polisher and elastomeric (rubber) or silicone-based materials.

SURFACES BLACKENED BY HEAT (when necessary)

- Exposure to high temperatures can cause the formation of dark marks.

  These do not constitute damage and can be removed by following the instructions given in the previous section.

H.6 Other surfaces

WARNING
Before starting tank cleaning operation wait until cool down.

Heated tanks/containers (daily)

- Clean the appliance tanks or containers spray S02 degreaser, clean with a sponge, rinse with water and dry the surface thoroughly.
- Use the accessories (optional or supplied) specified in the list to eliminate encrustations or food deposits.

WARNING
With electrical equipment, make sure no water comes into contact with electrical components: water entering can cause short circuiting and dissipation, tripping the appliance's protection devices.

Tanks and collection drawers (even several times a day)

- Remove any grease, oil, food residuals, etc., from trays, drawers and containers in general used for collection; always clean these containers at the end of the day using S02 degreaser.

Every change oil

Operate with the following procedure:

1. Spray S02 degreaser into the empty tank;
2. add water and bring to the boil for 1 minute;
3. drain the tank and rinse with water;
4. dry with a Microfibre[1] cloth.

Every two months

1. Operate with the same previous procedure, but using 1 or 2 flacon of S02 degreaser (750ml) dilutes in 24L water.

- While using the appliance, empty them when they are nearly full.

H.7 Filters

Use of filters for the oil increases its life and guarantees better cooking of the food in the event of reuse.

For cleaning (not suitable for disposable filters)

1. remove the filter from its housing;
2. if the filter is dirty with grease, wash with S02 degreaser;
3. rinse and dry;
4. refit the filter in its housing.

Replace the filter if deteriorated.

H.8 Appliance's tank, baskets and utensils cleaning

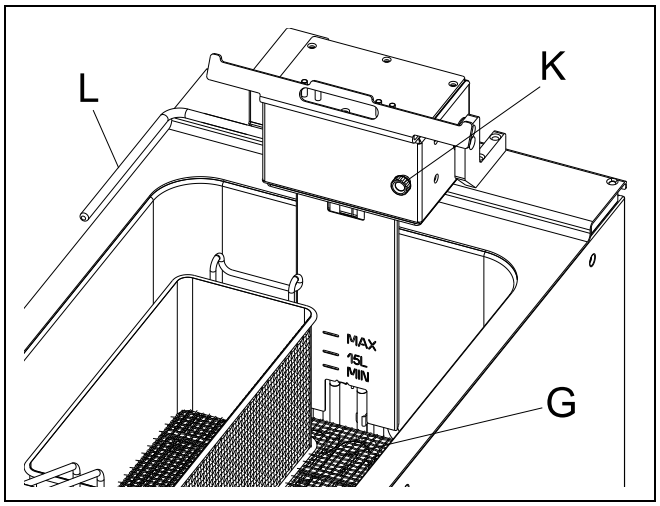

In order to clean the appliance's tank is necessary to lift the internal heating elements.

WARNING
Before starting tank and heating elements cleaning operation wait until cool down

The following procedure is valid for all appliance models; see figure above.

1. turn off the appliance and wait until the oil and appliance itself has cooled;
2. drain the oil from the tank by means of the special tap inside the cavity behind the door;
3. remove the grate "G" from the bottom of the tank.
4. pull the knob "K" and at the same time rotate the handle "L" until the heating elements blocks;
5. release the knob "K".

3. You can order it with this reference code 0S2881.

With the heating elements lifted, follow the procedure below:

a. Carefully clean the appliance with a damp cloth; do not use non-approved detergents as the y could damage the surfaces by mechanical (scratches) or chemical (corrosion) aggression.
b. Carefully clean the tank and the heating elements, taking particular care with the latter so as not to damage it.
c. Use damp, but not dripping, paper towels or a sponge to wipe away oil residue and bits of food from inside the deep fryer tank; cleaning every day will help prevent a buildup of grime.
d. Once clean, rinse the tank and ensure that all of the cleaning products have been removed and dry the tank.
e. Baskets, lid and utensils can be washed separately or inserted into a dish washing appliance using dishwasher detergents such as C11 detergent for dishwasher[4]and C12 Rinse aid for dishwasher[5]or C13 Eco Detergent for dishwasher[6] and C15 Eco Rinse aid for dishwasher[7]; at the end dry all carefully with a towel or in a dish rack.

NOTE!
At the end of the cleaning, in order to lowering the heating elements down, follows the previous procedure in reverse.

H.9 Internal parts (every 6 months)

IMPORTANT
Operations to be carried out only by specialised personnel.

- Check the condition of the internal parts.
- Remove any deposits of dirt inside the appliance.
- Check and clean the discharge system.

IMPORTANT
In particular conditions (e. g. intensive use of the appliance, salty environment, etc.) the above cleaning should be more frequent.

I TROUBLESHOOTING

I.1 Introduction

Certain faults may occur during normal use of the appliance. In some cases, faults can be eliminated easily and quickly by following the indication below.

If the fault persists, contact the Customer Care Service:

1. Disconnect the appliance from the main power supply;
2. Switch off the safety circuit breaker ahead of the appliance;
3. Close the gas and water tap(s), if they are present;
4. Remember to specify:
   - the type of fault
   - the appliance PNC (product number code)
   - the Ser. No. (appliance serial number).

IMPORTANT
The appliance PNC and serial number are essential for identifying the type of appliance and date of manufacture.

I.2 Warnings codes

Alarm code	Warning	Corrective Action (After-Sales Service)
AL_1	Control thermocouple disconnected	Connect the thermocouple
AL_2	Control thermocouple reversed	Reverse the polarity connection
AL_3	Level thermocouple disconnected	Connect the thermocouple
AL_4	Level thermocouple reversed	Reverse the polarity connection
AL_5	Control potentiometer disconnected	Connect the potentiometer

J APPLIANCE DISPOSAL

WARNING
Refer to "*Warning and Safety Information*".

J.1 Appliance recyclability and disposal

J.1.1 Recyclability

Our appliances are manufactured using a significant percentage of recyclable metals (such as stainless steel, iron, aluminium, galvanized sheet, copper, etc.), which can be recovered through the local recycling systems, in compliance with the regulations in force in the country of use.

National regulations regarding waste disposal may vary. Disposal of the appliance must therefore be carried out in accordance with the applicable legislation and the directives issued by the competent authorities in the country where the appliance is decommissioned.

The components of the appliance must be separated and disposed of in accordance with their material composition (e.g. metals, oils, greases, plastics, rubber, refrigerant gases, insulating boards and other insulating material, glass wool, LEDs, etc.) and in full compliance with applicable local and international waste management regulations.

J.1.2 Procedure regarding appliance disposal and component / material recovery

This product should not simply be disposed of in the environment at the end of its life cycle; it is imperative instead either to dispose of it in accordance with local environmental regulations, or, preferably, to deliver it whole to an authorized recycling center.

All removed components, including doors and other structural parts, must be delivered together with the appliance to an authorized recycling or dismantling facility.

The dismantling/recycling center will apply state of the art technologies and methods available to them to effectively disassemble the products for best recyclability.

Note that printed circuit boards, electrical motors or other components identified in European Union legislation to be of

4. You can order it with this reference code 0S2092.
5. You can order it with this reference code 0S2094.
6. You can order it with this reference code 0S2093.
7. You can order it with this reference code 0S2904.

high critical raw materials recovery potential need to be addressed specifically.

In case of doubts or questions, always refer to your reference customer care service.

Before disposing of the appliance, make sure to remove any food and organic residues. Carefully inspect its physical condition and preservation state, checking for potential leaks of liquids or gases, as well as for broken parts that may pose hazards during handling and subsequent dismantling.



The symbol on the product indicates that this product should not be treated as domestic waste, but must be correctly disposed of in order to prevent any negative consequences for the environment and human health. For further information on the recycling of this product, contact the local dealer or agent, the customer care service or the local body responsible for waste disposal.



NOTE!
When dismantling the appliance, any marking, this manual and other documents concerning the appliance must be destroyed.

CE

Electrolux Professional SPA
Viale Treviso 15
33170 Pordenone
www.electroluxprofessional.com