STANDARD CABINETS
FRIGORIFERI STANDARD

FREEZER 1400LT

PNC	MODEL	REF	PAGE	DESCRIPTION	NOTE/ BRAND
110313	ZRX142FF	h	3,6,7,10,11	2-DR FREEZER 1430L -22/-15°C, DIGIT	Zanussi
110314	ZRX142GF	i	4,6,8	2-GLASS DR FREEZER 1430L -20-15°C, DIGIT (NOT FOR EU)	Zanussi
110315	ZRX144HF	l	5,6,7,10,11	4x½-DR FREEZER 1430L -22/-15°C, DIG	Zanussi
110324	ZR4142FF	m	3,6,7,10,11	2-DR FREEZER 1430L -22/-15°,DIG,S/S	Zanussi
110339	ZRX142FFG	n	3,6,7,10,11	2-DR FREEZER 1430L -22/-15°C, DIGITAL-UK	Zanussi
110351	ZR4142FFG	o	3,6,7,10,11	2-DR FREEZER 1430L -22/-15°C,DIG,S/S-UK	Zanussi
110382	ZR4142FFR	f1	3,8,9,10,11	2-DR FREEZ.1430L -22/-15 DIG,S/S-REMOTE	Zanussi
110539	ZRK142FF	p	3,6,7,10,11	2-DOOR FREEZER 1430L -22/-15°C, DIGITAL	Zanussi
110804	ZRX144HF	m1	5,6,7,10,11	4x½-DOOR FREEZER 1430L -22°-15°C,DIGITAL-R290	Zanussi
110812	ZR4142FF	n1	3,6,7,10,11	2-DOOR FREEZER 1430L -22°-15°C,DIGITAL,S/S-R290	Zanussi
110946	**ZR4142FFR**	**f1**	**3,8,9,10,11**	**2-DOOR FREEZER 1430L -22-15°C, DIGITAL, S/S - REMOTE**	**Zanussi**
110958	**ZRX144HF**	**m1**	**5,6,7,10,11**	**4x½-DOOR FREEZER 1430L -22-15°C, DIGITAL, A304-R290**	**Zanussi**
110964	**ZR4142FF**	**n1**	**3,6,7,10,11**	**2-DOOR FREEZER 1430L -22-15°C, DIGITAL, S/S - R290**	**Zanussi**
190227	REX142FF	e1	3,6,7,10,11	2-DR FREEZER 1430L -22/-15°C, DIGIT UK PLUG	To brand
190446	REX142FFG	g	3,6,7,10,11	2-DR FREEZ 1430L -22/-15°C DIGITAL+WHEEL	To brand
190635	ARX142GFR	h1	3,6,7,10,11	2-GLASS DR FREEZER 1430L -20-15°C, DIGIT	Alpen
190975	ZRX142FF	t1	3,6,7,10,11	2-DOOR FREEZER 1430L -22/-15°C, DIGIT-UK PLUG	Zanussi
725328	**RE4142FFR**	**d1**	**3,8,9,10,11**	**2-DOOR FREEZER 1430L -22-15°C, DIGITAL, S/S-REMOTE**	**EPR**
725363	**REX144HF**	**o1**	**5,6,7,10,11**	**4x½-DOOR FREEZER 1430L -22-15°C, DIGITAL, A304-R290**	**EPR**
725371	**RE4142FF**	**p1**	**3,6,7,10,11**	**2-DOOR FREEZER 1430L -22-15°C, DIGITAL, S/S-R290**	**EPR**
725382	**RE471FLF**	**q1**	**3,6,7,10,11**	**2-DOOR FREEZER 1430L+WHEELS -15-22°C, DIGITAL, A304-R290**	**EPR**
727286	REX142FF	a	3,6,7,10,11	2-DR FREEZER 1430L -22/-15°C, DIGIT - NOT FOR EUROPE	EPR
727287	REX142GF	c	4,6,8	2-GLASS DR FREEZER 1430L -20-15°C, DIGIT (NOT FOR EU)	EPR
727288	REX144HF	f	5,6,7,10,11	4x½-DR FREEZER 1430L -22/-15°C, DIG - NOT FOR EUROPE	EPR
727297	RE4142FF	d	3,6,7,10,11	2-DR FREEZER 1430L -22/-15°,DIG,S/S	EPR
727366	REX142FFG	b	3,6,7,10,11	2-DR FREEZER 1430L -22/-15°C, DIGITAL-UK	EPR
727378	RE4142FFG	e	3,6,7,10,11	2-DR FREEZER 1430L -22/-15°C,DIG,S/S-UK	EPR
727447	REX-142FFSS	f	3,6,7,10,11	2-DR FREEZER 1430L -22-15°C,DIGITAL-M.E. - NOT FOR EUROPE	EPR
727476	RE4142FFR	d1	3,8,9,10,11	2-DR FREEZ.1430L -22/-15 DIG,S/S-REMOTE A430	EPR
727833	REX144HF	o1	5,6,7,10,11	4x½-DOOR FREEZER 1430L -22-15°C, DIG-R290	EPR
727843	RE4142FF	p1	3,6,7,10,11	2-DOOR FREEZER 1430L -22-15°C,DIG,S/S-R290	EPR
727854	RE471FLF	q1	3,6,7,10,11	2-DOOR DIGITAL FREEZER+WHEELS 1430L -15-22°-S/S-LEFT-R290	EPR
728709	REK142FF	a	3,6,7,10,11	2-DOOR FREEZER 1430L -22/-15°C, DIGITAL	EPR

Rev. 14

Index and pages

Cabinet and door/Armadio e porta 3,4,5
Cooling unit assembly/Gruppo refrigerante 6,7
Remote cooling unit assembly/Gruppo refrigerante remoto 8,9
Control panel/Pannello comandi 10,11
Spare parts list/Lista ricambi 12-17

STANDARD CABINETS
FRIGORIFERI STANDARD

FREEZER 1400LT

PNC	MODEL	REF	PAGE	DESCRIPTION	NOTE/ BRAND
729054	ARX142FF	q	3,6,7,10,11	2-DR FREEZER 1430L -22/-15°C, DIGIT	Alpen
729055	ARX142GF	r	4,6,8	2-GLASS DR FREEZER 1430L -20-15°C, DIGIT (NOT FOR EU)	Alpen
729056	ARX144HF	s	5,6,7,10,11	4x½-DR FREEZER 1430L -22/-15°C, DIG	Alpen
729065	AR4142FF	t	3,6,7,10,11	2-DR FREEZER 1430L -22/-15°,DIG,S/S	Alpen
729080	ARX142FFG	u	3,6,7,10,11	2-DR FREEZER 1430L -22/-15°C, DIGITAL-UK	Alpen
729092	AR4142FFG	v	3,6,7,10,11	2-DR FREEZER 1430L -22/-15°C,DIG,S/S-UK	Alpen
729123	AR4142FFR	g1	3,8,9,10,11	2-DR FREEZ.1430L -22/-15 DIG,S/S-REMOTE	Alpen
729132	ARK142FF	w	3,6,7,10,11	2-DOOR FREEZER 1430L -22/-15°C, DIGITAL	Alpen
729282	NRX142FF	x	3,6,7,10,11	2-DR FREEZER 1430L -22/-15°C, DIGIT	To brand
729283	NRX142GF	y	4,6,8	2-GLASS DR FREEZER 1430L -20-15°C, DIGIT (NOT FOR EU)	To brand
729288	NR4142FF	z	3,6,7,10,11	2-DR FREEZER 1430L -22/-15°,DIG,S/S	To brand
729302	NRX142FFG	a1	3,6,7,10,11	2-DR FREEZER 1430L -22/-15°C, DIGITAL-UK	To brand
729312	BR4142FFG	b1	3,6,7,10,11	2-DR FREEZER 1430L -22/-15°C,DIG,S/S-UK	To brand
729355	NRK142FF	c1	3,6,7,10,11	2-DOOR FREEZER 1430L -22/-15°C, DIGITAL	To brand
729563	ARX144HF	r1	5,6,7,10,11	4x½-DOOR FREEZER 1430L -22°-15°C, DIGITAL-R290	Alpen
729572	AR4142FF	s1	3,6,7,10,11	2-DOOR FREEZER 1430L -22°-15°C,DIGITAL,S/S-R290	Alpen
729654	**AR4142FFR**	**g1**	**3,8,9,10,11**	**2-DOOR FREEZER 1430L -22-15°C, DIGITAL, S/S - REMOTE**	**Alpen**
729677	**AR4142FF**	**s1**	**3,6,7,10,11**	**2-DOOR FREEZER 1430L -22-15°C, DIGITAL, S/S - R290**	**Alpen**
190B4F	RE4142FF	k	3,6,7,10,11	2-DR FREEZER 1430L -22/-15°,DIG,S/S UK	EPR
190CX9	REX144HF	u1	5,6,7,10,11	4x½-DR FREEZER 1430L -22/-15°C, DIG - UK	EPR
190D4P	ZR4142FF	v1	3,6,7,10,11	2-DOOR FREEZER 1430L -22°-15°C,DIGITAL,S/S-R290-UK	Zanussi
190EX0	**ZR4142FF**	**w1**	**3,6,7,10,11**	**2-DOOR FREEZER 1430L -22-15°C, DIGITAL, S/S - R290 UK PLUG**	**Zanussi**
190F2Z	**RE4142FFR**	**j**	**3,8,9,10,11**	**2-DOOR FREEZER 1430L -22-15°C, DIGITAL,**	**EPR**
190GF3	**REX144HF**	**j1**	**5,6,7,10,11**	**4x½-DOOR FREEZER 1430L -22-15°C, DIGITAL**	**EPR**

Index and pages

Cabinet and door/Armadio e porta 3,4,5
Cooling unit assembly/Gruppo refrigerante 6,7
Remote cooling unit assembly/Gruppo refrigerante remoto 8,9
Control panel/Pannello comandi 10,11
Spare parts list/Lista ricambi 12-17

Rev. 14

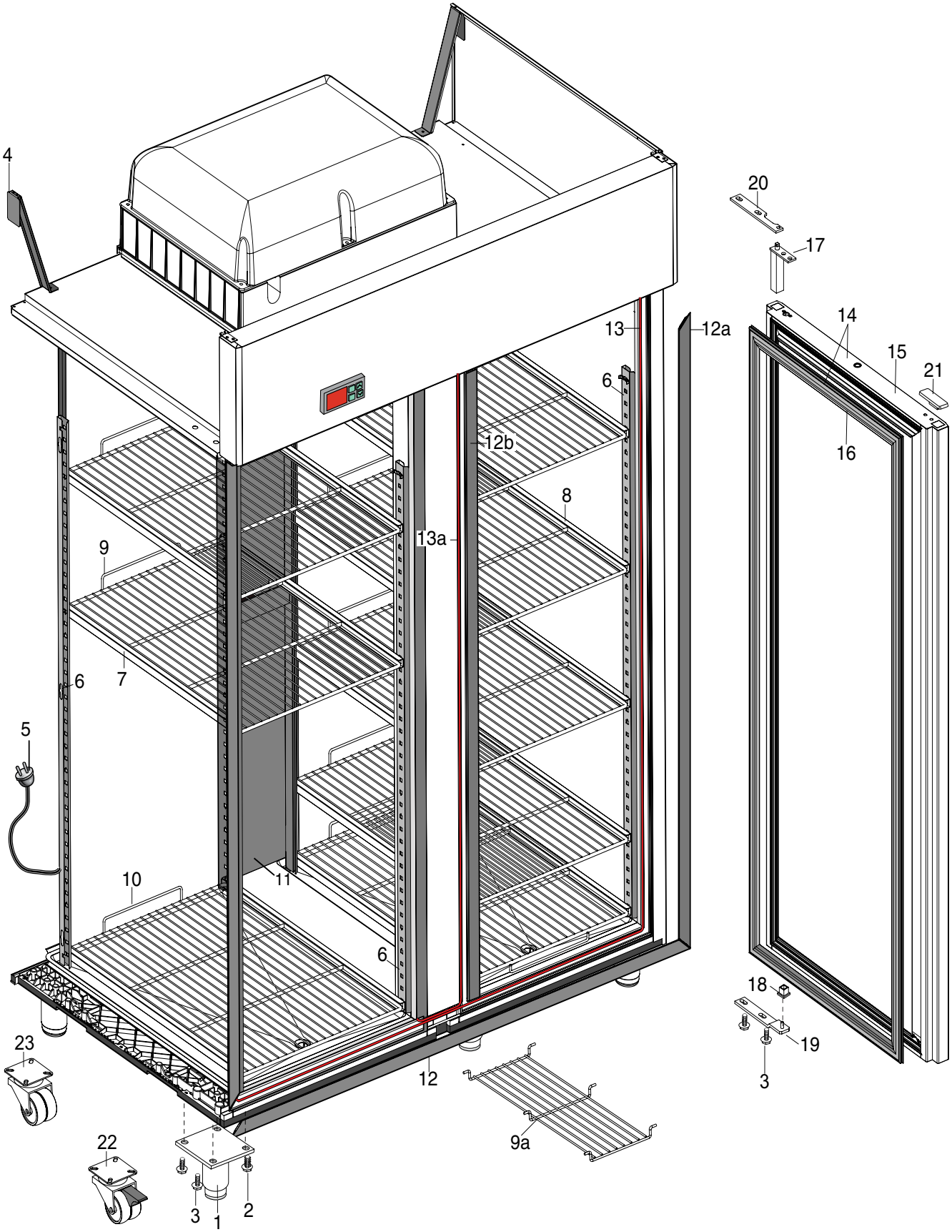

560122 porta intera

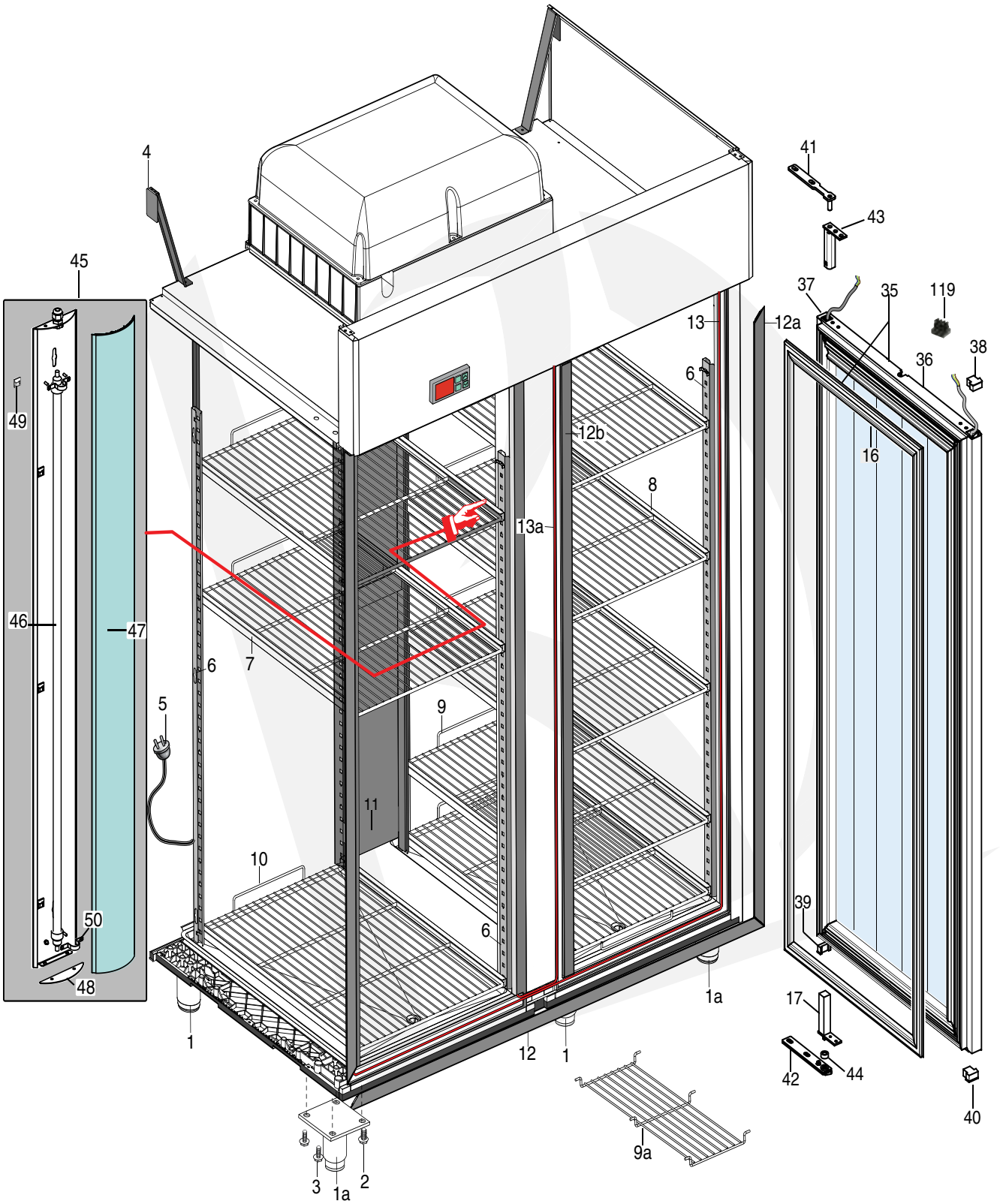

560112 porta vetro

From Ser. Nr.43510001 Up to Ser. Nr....	Ed. 09-2021	Page: **4**	**Doc No: 560112**

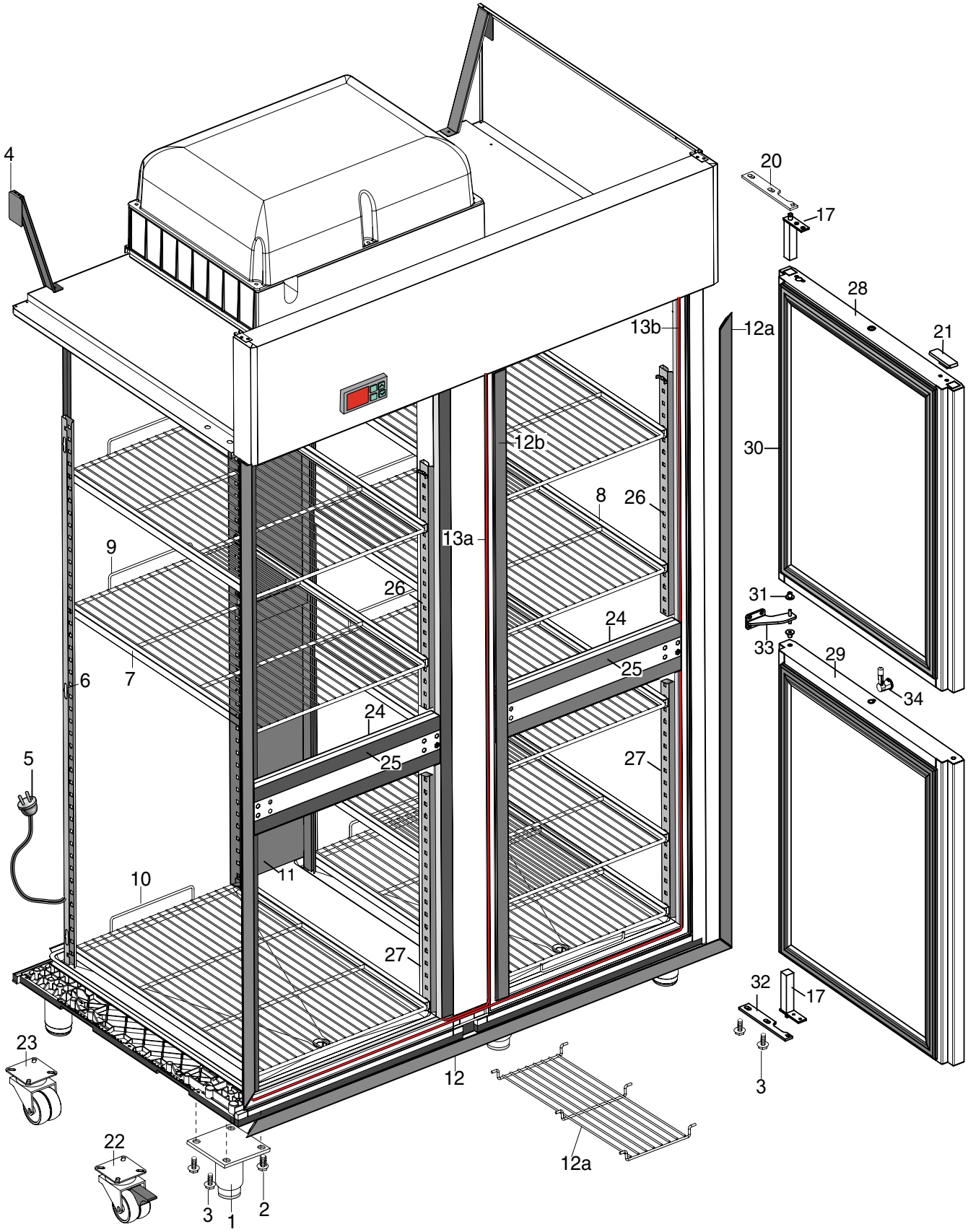

560112 mezze porte

COOLING UNIT ASSEMBLY
UP TO WK 37/2021 FOR FULL DOOR
ALWAYS FOR GLASS DOOR

Refer to TB N°VTX2015-03

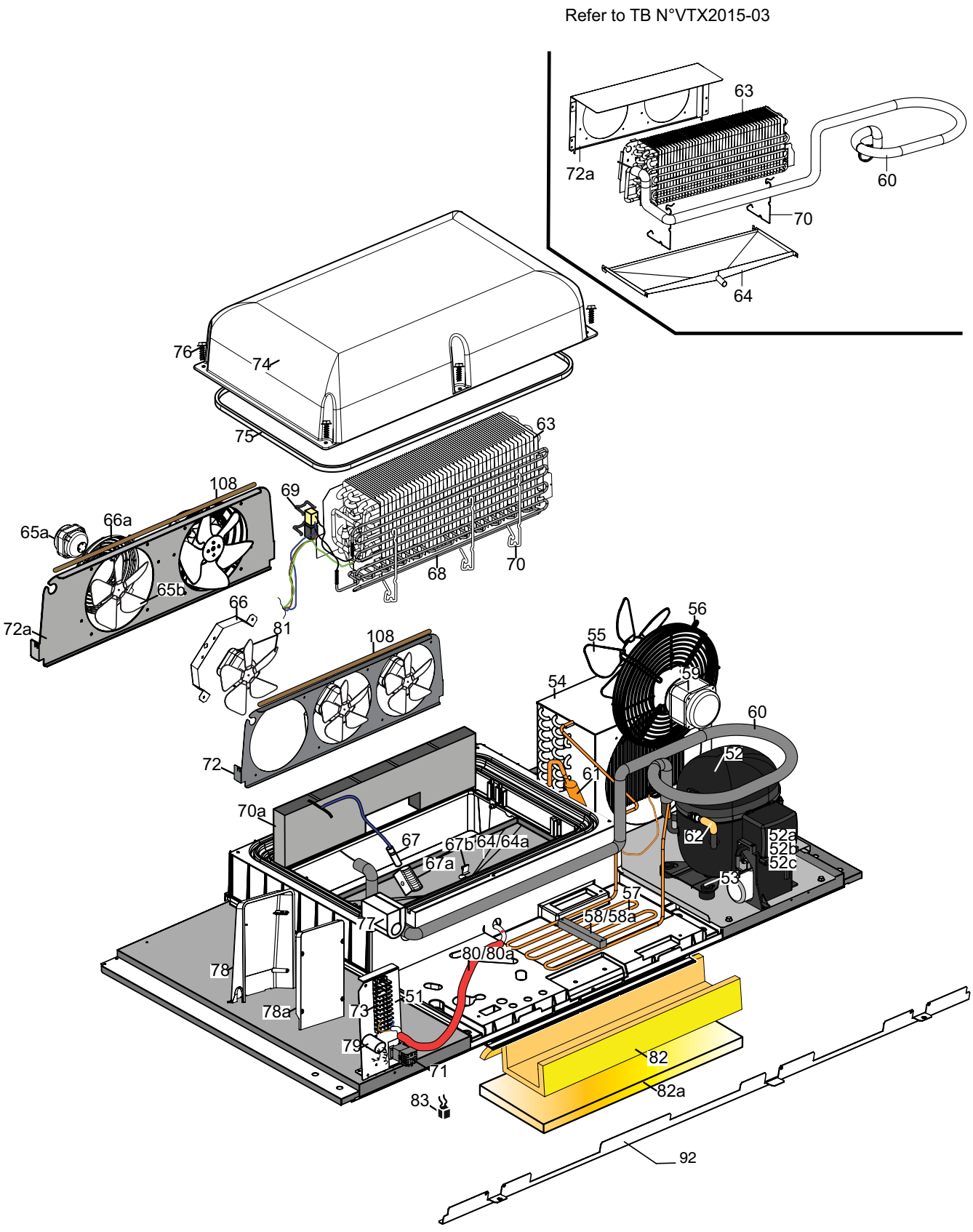

From Ser. Nr.43510001 Up to Ser. Nr....	Ed. 09-2021	Page: **6**	**Doc No: 560112**

COOLING UNIT ASSEMBLY FROM WK 38/2021
FOR FULL DOOR

Refer to TB N°VTX2015-03

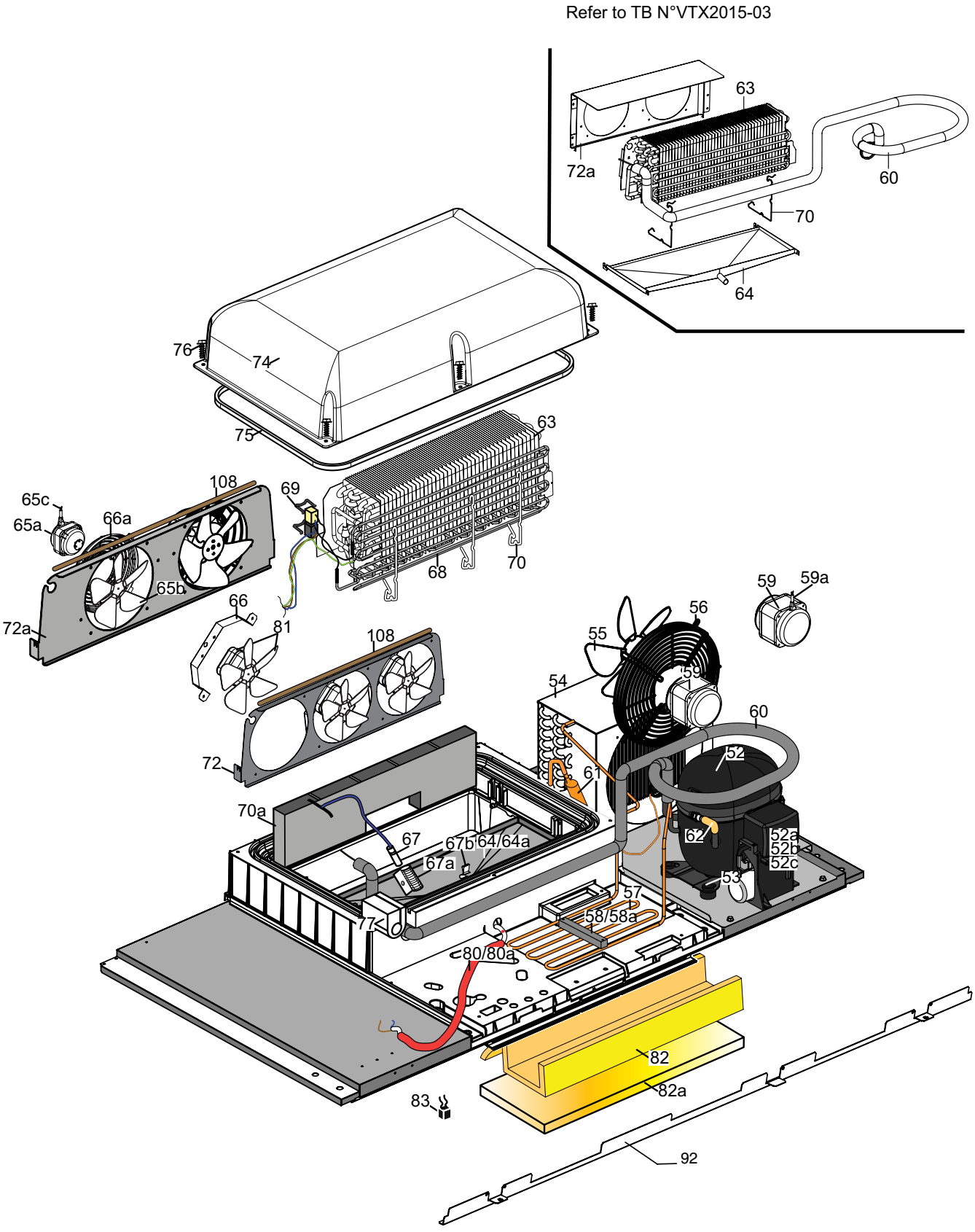

REMOTE COOLING UNIT ASSEMBLY
UP TO WK 37/2021 FOR FULL DOOR
ALWAYS FOR GLASS DOOR

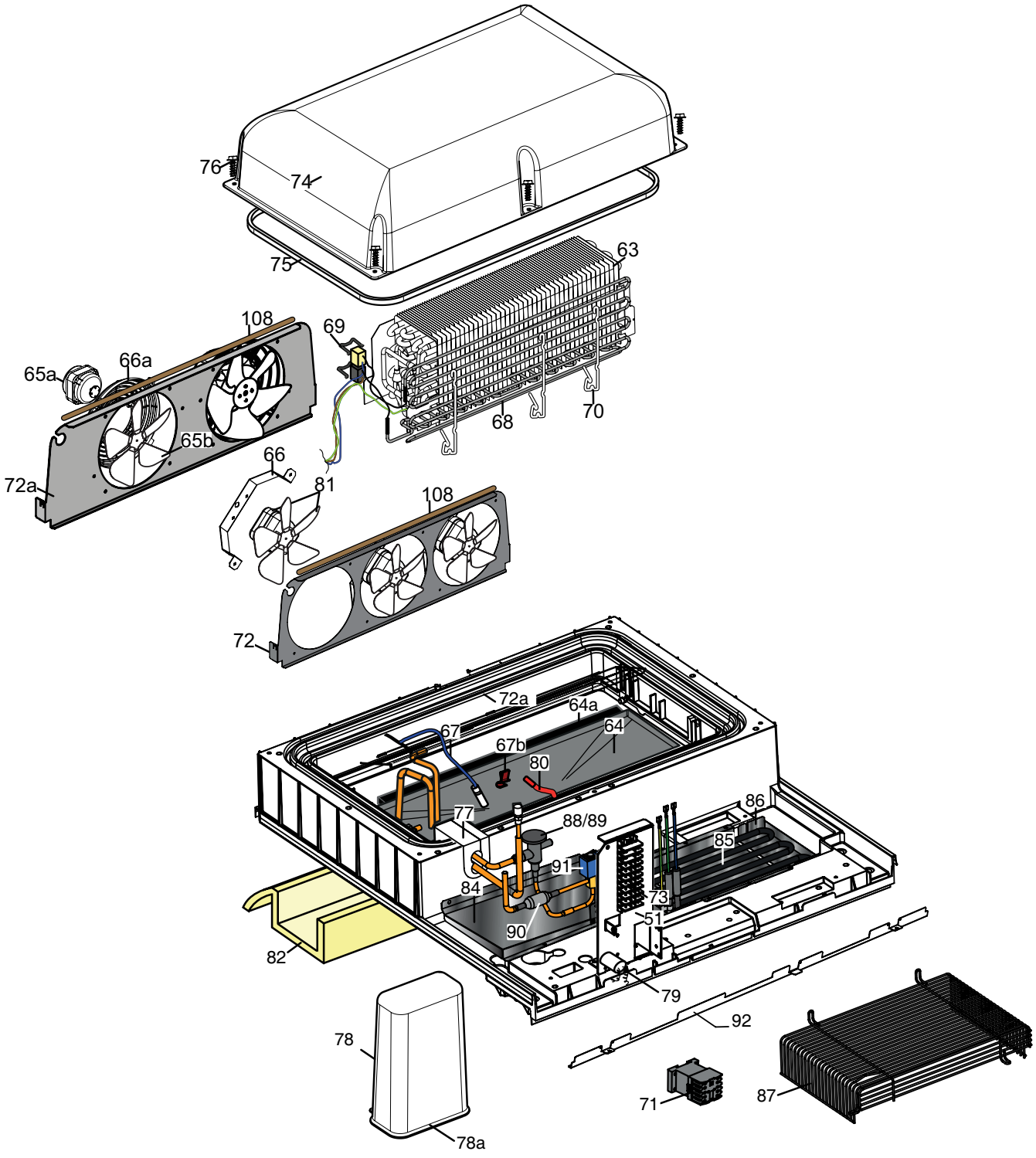

REMOTE COOLING UNIT ASSEMBLY FROM WK 38/2021
FOR FULL DOOR

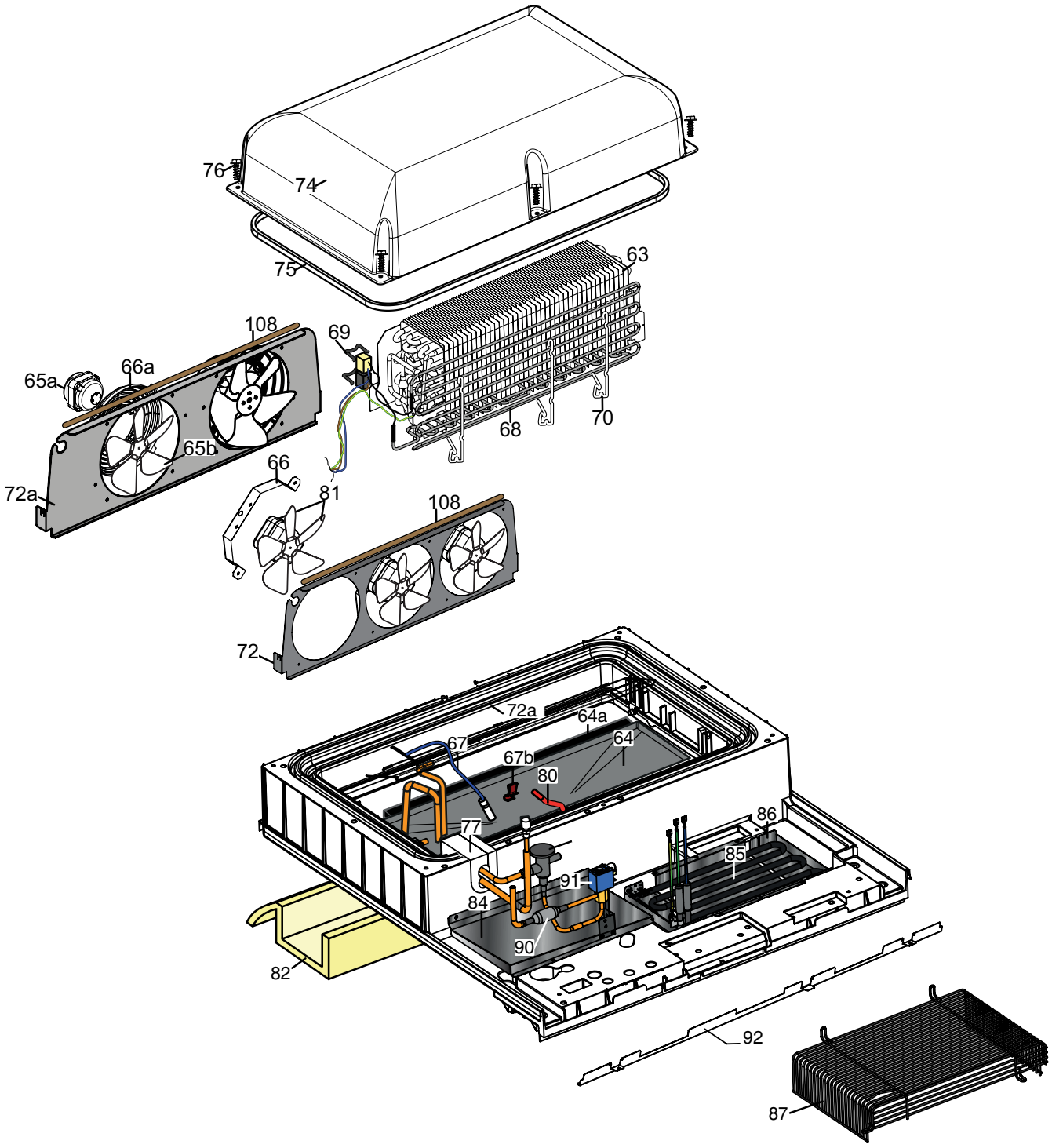

CONTROL PANEL
UP TO WK 37/2021 FOR FULL DOOR
ALWAYS FOR GLASS DOOR

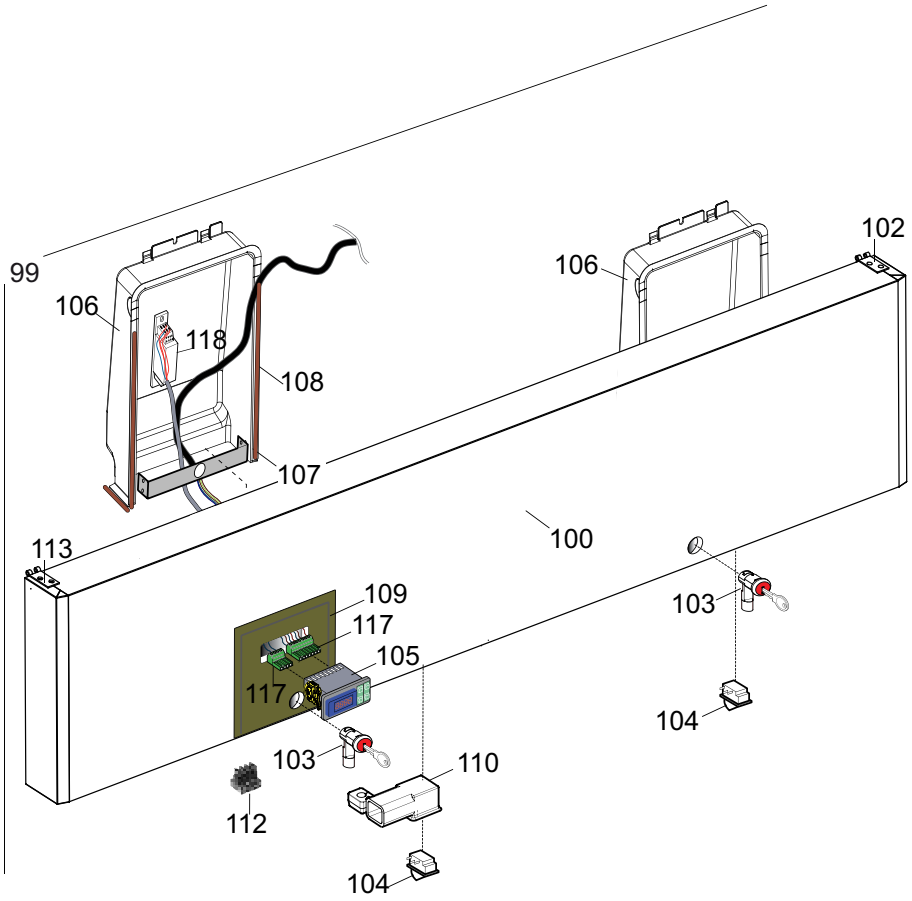

CONTROL PANEL FROM WK 38/2021
FOR FULL DOOR

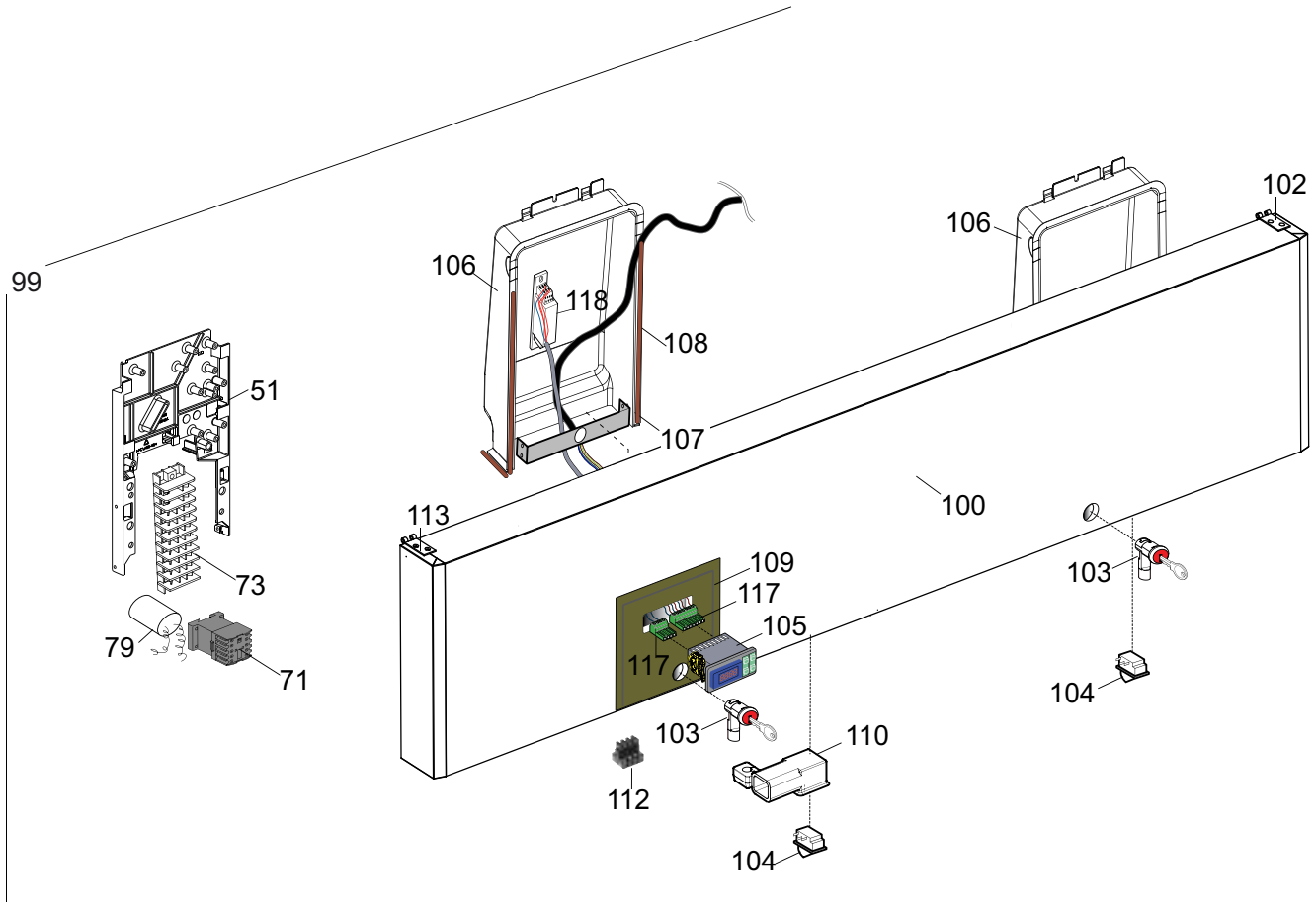

Pos	Code	Factory code	Description	Descrizione	Ref/notes
1	093243	541R050..	Foot	Piedino	
1a	093244	518R026..	Back foot glass door	Piedino anteriore porta vetro	c,i,j,r,y,d1,f1,g1,h1
2	093245	2175552..	Screw (use by fix foot)	Vite per plastica per piedino	
3	093246	5187086..	Screw M8X20 (use by fix bracket)	Vite M8x20 per fiss. staffa sup/inf	
4	093394	502R175..	Side support	Staffa supporto fianchi	
5	094423	A02060702	Cavo di alimentazione SCHUKO	SCHUKO supply cable	i,j,r,y,d1,f1,g1,h1
5	095750	0635R32300	Cavo di alimentazione SCHUKO	SCHUKO supply cable	a,c,d,f,g,h,j,l,m,p,q,s,t,w,x,z,c1,d1,f1,g1,m1,n1,o1,p1,q1,r1,s1,v1
5		0635R35600	Cavo di alimentazione UK	UK supply cable	u1
5	**094823**	**0634R02900**	**Cavo di alimentazione UK**	**UK supply cable**	**j1,w1**
6	093249	501R382..	Front/back Rack	Cremagliera anteriore/posteriore	
7	093250	501R479..	Left support	Guida Sx	
8	093251	501R481..	Right support	Guida Dx	
9	093252	514R106..	Grid 2/1rilsan	Griglia 2/1 rilsan	
9a	093397	514R117..	Central grid	Griglia centrale	
10	093253	514R122..	Bottom grid rilsan	Griglia di fondo rilsan	
11	093490	501R621..	Rack rupport	Supporto centrale cremagliere	
12	093545	832R092..	Orizzontal frame	Cornice orizzontale	
12a	093255	832R091..	Vertical frame	Cornice verticale	
12b	093399	832R094..	Vertical frame central support	Cornice verticale montante	
13	093400	617R0680..	Heating cable frame 28,95 W	Cavo riscaldante cornice 28,95 W	
13b	093402	617R077..	Heating cable frame 40,5 W 1/2 doors	Cavo riscaldante cornice 40,5 W	Half doors
13a	093401	617R069..	Heating cable frame 15,98 W	Cavo riscaldante cornice 15,98 W	
14	093309	835R243..	Gasket, hinge, and door	Porta con guarnizione,cerniera bt	a,b,g,h,n,p,q,u,w,x,a1,c1,e1,q1,t1
14	093312	835R245..	Gasket, hinge, and door A430	Porta con guarnizione , cerni.A430	d,e,k,m,o,t,v,z,b1,n1,p1,s1,v1
15	093311	835R24208	Door (left) A304	Porta 304 bt	a,b,g,h,n,p,q,u,w,x,a1,c1,e1,q1,t1
15	093310	835R244..	Door (left) A430	Porta 430	d,e,k,m,o,t,v,z,b1,n1,p1,s1,v1
16	093257	548R06802	Guarnizione porta vetro	Gasket glass door	
16	094152	548R08000	Guarnizione porta cieca	Gasket full door	
17	082219	8357040..	Hinge door	Cerniera porta	
18	081654	5447006..	Door bush	Boccola per porta	
19	093341	833R216..	Lower stirrup door	Staffa inferiore porta	
20	082257	5057238..	Upper stirrup door	Staffa superiore porta	
21	093271	541R05301..	Hole hinge plug	Tappo per cerniere	
22	093574	835R248..	Weel	Ruota rotante	b,e,g,n,o,u,v,a1,b1,q1
23	093575	835R249..	Brake weel	Ruota rotante con freno	b,e,g,n,o,u,v,a1,b1,q1
24	093343	880R642..	Support half door a430	Traversa per 1/2 porte a430	
25	093272	832R100..	Support half door frame	Cornice per traversa	
26	093275	501R518..	Upper rack 1/2 doors a304	Cremagliera ant. 1/2 porte sup.	
27	093276	501R516..	Lower rack 1/2 doors a304	Cremagliera ant. 1/2 porte 304 inf.	
28	093585	835R25410	Upper half door a304	Ass.1/2 porta superiore	
29	093519	835R25509	Lower half door a304	Ass.1/2 porta inferiore	
30	094153	548R08100	Guarnizione magnetica 1/2 porte	Half door gasket	
31	093392	546R211..	Half door bush	Boccola per cerniera 1/2 porte	
32	093301	833R219..	Lower hinge assembly	Ass. cerniera inferiore	

Pos	Code	Factory code	Description	Descrizione	Ref/notes
33	093344	505R124..	Central hinge door	Cerniera centrale	
34	093345	833R209..	Serratura	Serratura	
35	093313	880R576..	Glass door assembled	Ass. porta vetro completa	c,i,j,r,y,d1,f1,g1,h1
36	093459	879R158..	Glass door BT	Porta vetro bt	c,i,j,r,y,d1,f1,g1,h1
37	093535	546R224..	Upper right plug door GL	Tappo sup. dx pv	c,i,j,r,y,d1,f1,g1,h1
38	093536	546R223..	Upper left plug door GL	Tappo sup. sx pv	c,i,j,r,y,d1,f1,g1,h1
39	093537	546R225..	Lower right plug door GL	Tappo inf. dx pv	c,i,j,r,y,d1,f1,g1,h1
40	093538	546R222..	Lower left plug door GL	Tappo inf. sx pv	c,i,j,r,y,d1,f1,g1,h1
41	093349	505R127..	Upper hinge GL	Staffa superiore pv	c,i,j,r,y,d1,f1,g1,h1
42	093301	833R219..	Lower bracket (reversible)	Ass. staffa inf.(reversibile) pv	c,i,j,r,y,d1,f1,g1,h1
43	093320	835R281..	Upper hinge GL	Ass cerniera sup pv	c,i,j,r,y,d1,f1,g1,h1
45	094484	835R268..	Light support assembly	Ass. lampada completo	c,i,j,r,y,d1,f1,g1,h1
46	093350	661R010..	Neon 28W	Lampada 28W	c,i,j,r,y,d1,f1,g1,h1
47	093258	546R226..	Protection light	Frontale lampada	c,i,j,r,y,d1,f1,g1,h1
48	093351	501R495..	Plug of clousure	Tappo chiusura luce	c,i,j,r,y,d1,f1,g1,h1
49	093352	546R232..	Wiring stopper	Ferma cavo	c,i,j,r,y,d1,f1,g1,h1
50	093321	501R502..	Stopper light	Fermo lampada	c,i,j,r,y,d1,f1,g1,h1
51	*	502R24300	Electrical wiring support	Supporto impianto elettrico	Glass door always
51	*	502R24300	Electrical wiring support	Supporto impianto elettrico	Full door up to 2021/37
51	097284	546R43401	Electrical wiring support	Supporto impianto elettrico	Full door from 2021/38
*	*	880R628..	Cooling unit gr 0.34 404A	Modulo gruppo gr 0.34 404A	c,i,r,y
*	094508	880R54515	Cooling unit gr 0.29 404A	Modulo gruppo gr 0.29 404A	a,d,f,h,l,m,p,q,s, t,w,x,z,c1,e1,u1
*	094508	880R54515	Cooling unit gr 0.29 404A	Modulo gruppo gr 0.29 404A	k,t1 from 2021/38
*	*	880R67514	Cooling unit (conveyor 3 holes)gr 0.34	Modulo gruppo (conveyor 3 holes)gr0.34	b,e,n,o,u,v,a1,b1
*	*	880R67616	Coolink unit R290	Modulo gruppo R290	j1,m1,n1,o1,p1,q1, r1,s1,v1,w1
*	*	881R849..	Cooling unit 404A SHUKO	Modulo gruppo 404A SHUKO	g
*	*	880R86209	Remote cooling unit	Modulo gruppo remoto	d1,f1,g1
*	*	880R86701	Remote cooling unit	Modulo gruppo remoto	h1
*	*	882R02400	Cooling unit gr 0.29 404A UK plug	Modulo gruppo gr 0.29 404A spinaUK	k,t1 up to 2021/37
*****	*****	**880R99800**	**Remote cooling unit R449A**	**Modulo gruppo remoto R449A**	**j**
52	093424	684R056..	Compressor (NT2192GK) 220/50hz	Compressore (NT2192GK) 220/50	a,c,d,f,h,i,k,l,m,p, q,r,s,t,w,x,y,z,c1, e1,t1,u1
52	093403	684R055..	Compressor (NT2212GK) 220/50hz	Compressore (NT2212GK) 220/50	b,e,g,n,o,u,v,a1,b1
52	093423	684R06000	Compressor (NT2210U) 220/50hz	Compressore (NT2210U) 220/50	j1,m1,n1,o1,p1,q1, r1,s1,v1,w1
52a	*	*	Start relay	Relè avviamento	
52b	*	*	Protector	Protettore	
52c	*	*	Start capacitor	Condensatore di avviamento	
53	*	*	Rubber compressor	Fissaggio compressore	
54	093404	830R050..	Condenser	Condensatore 25X21,65	
55	084780	5117046..	Ventola 254-34	Ventola 254-34	
55	093784	511R01300	Ventola 254-34	Ventola 254-34	j1,m1,n1,o1,p1,q1, r1,s1,v1,w1
56	092651	5467075..	Fan protection	Protezione ventola	
57	094574	515R130..	Evaporation water pipe	Serpentina evap. acqua di conden.	
58	093406	501R417..	Stopper pipe	Staffa fissaggio serpentina	
58a	093260	543R093..	Stopper pipe	Bloccetto fissaggio serpentina	

Pos	Code	Factory code	Description	Descrizione	Ref/notes
59	097291	682R14400	Condenser fan (VNT2540)	Ventilatore condensatore(VNT2540)	a,b,d,e,f,g,h,k,l,m,p,x,z,c1,e1,t1,u1
59	097066	682R12900	Condenser fan (EBM 55330-IQ3620)	Ventilatore condensatore(EBM 55330-IQ3620)	h1,j1,m1,n1,o1,p1,q1,r1,s1,v1,w1
59a	097055	635R37900	Fan wiring	Cablaggio ventilatore	g,h1,j1,m1,n1,o1,p1,q1,r1,s1,v1,w1
60	095426	858R066..	Heat exchanger	Scambiatore	a,c,d,f,h,i,k,l,m,p,q,r,s,t,w,x,y,z,c1,e1,t1,u1
60	093571	858R065..	Heat exchanger	Scambiatore	b,e up to wk22.2015
60	094569	858R065..	Heat exchanger	Scambiatore	b,e,g from wk23.2015 n,o,u,v,a1,b1
60	096599	858R07100	Heat exchanger	Scambiatore	j1,m1,n1,o1,p1,q1,r1,s1,v1,w1
61	084078	8057298..	Dehidrator filter	Filtro 40 gr	
62	0A9459	8457085..	Compressor valve (charge or disch.)	Valvola per compressore	
63	093430	830R041..	Evaporator 4R 8T	Evaporatore 4R 8T 2 circ.	a,c,d,f,h,i,k,l,m,p,q,r,s,t,w,x,y,z,c1,d1,e1,f1,g1,h1,t1,u1
63	093408	830R043..	Evaporator 5R 8T	Evaporatore 5R 8T 2 circ.	b,e up to 22/2015 m1,n1,o1,p1,q1,r1,s1,v1,w1
63	094570	830R10700	Evaporator 4R 8T (460 PASSO DIFF.GEOM.1022)	Evaporatore 4R 8T (460 PASSO DIFF.GEOM.1022)	b,e,g from 23/2015 n,o,u,v,a1,b1
64	093278	833R212..	Evaporator tray	Vaschetta evaporatore	
64	094571		Evaporator tray	Vaschetta evaporatore	b,e,g from wk23.2015 n,o,u,v,a1,b1
64a	093409	548R072..	Evaporator tray insulation	Isolante per vaschetta evaporatore	
65	097000	682R02C00	Evaporator fan motor	Ventilatore evaporatore fime	a,c,d,f,h,i,j,k,l,m,p,q,r,s,t,w,x,y,z,c1,d1,e1,f1,g1,t1,u1
65a	**096661**	**682R12800**	**Evaporator fan motor**	**Ventilatore evaporatore ebm**	**b,e,g,n,o,u,v,a1,b1,h1,m1,n1,o1,p1,q1,r1,s1,v1 up to 2022/11**
65a	**096661**	**682R12800**	**Evaporator fan motor**	**Ventilatore evaporatore ebm**	**b,e,g,n,o,u,v,a1,b1,h1,j1,m1,n1,o1,p1,q1,r1,s1,v1 from 2023/50**
65b	**093411**	**511R011..**	**Evaporator fan**	**Ventola ventilatore evaporatore**	**b,e,g,n,o,u,v,a1,b1,h1,m1,n1,o1,p1,q1,r1,s1,v1 up to 2022/11**
65b	**093411**	**511R011..**	**Evaporator fan**	**Ventola ventilatore evaporatore**	**b,e,g,n,o,u,v,a1,b1,h1,j1,m1,n1,o1,p1,q1,r1,s1,v1 from 2023/50**
65c	**097055**	**635R37900**	**Fan wiring**	**Cablaggio ventilatore**	**g,h1,m1,n1,o1,p1,q1,r1,s1,v1,w1 from 2021/38 up to 2022/11**
65c	**097055**	**635R37900**	**Fan wiring**	**Cablaggio ventilatore**	**g,h1,j1,m1,n1,o1,p1,q1,r1,s1,v1,w1 from 2021/38 from 2023/50**
66	093326	502R52400	Fan support entry level	Staffa motore entry level	a,c,d,f,h,i,j,k,l,m,p,q,r,s,t,w,x,y,z,c1,d1,e1,f1,g1,t1,u1
66	**093326**	**502R52400**	**Fan support entry level**	**Staffa motore entry level**	**b,e,g,n,o,u,v,a1,b1,h1,m1,n1,o1,p1,q1,r1,s1,v1,w1 from 2022/12 up to 2023/49**

Pos	Code	Factory code	Description	Descrizione	Ref/notes
66a	**093412**	**514R123..**	**Protection fan EBM**	**Griglia EBM per ventilatore evap**	**b,e,g,n,o,u,v,a1, b1,h1,m1,n1,o1, p1,q1,r1,s1,v1 up to 2022/11**
66a	**093412**	**514R123..**	**Protection fan EBM**	**Griglia EBM per ventilatore evap**	**b,e,g,n,o,u,v,a1, b1,h1,j1,m1,n1, o1,p1,q1,r1,s1,v1 from 2023/50**
67	092174	646R068..	Cavity probe	Sonda cella	
67a	091601	546R075..	Probe protection	Gabbietta per sonda	
67b	093547	514R129..	Stopper/spring for heating cable	Fermo per cavo riscaldante	
68	093428	617R064..	Heating element with thermostat	Resistenza con termost. 500w	a,c,d,f,h,i,j,k,l,m, p,q,r,s,t,w,x,y,z,c1, d1,e1,f1,g1,h1,t1, u1
68	093413	617R063..	Heating element with thermostat	Resistenza con termost. 750w	b,e,g,n,o,u,v,a1, b1,j1,m1,n1,o1,p1, q1,r1,s1,v1,w1
68		856R19401	Heating element with thermostat and connectors	Resistenza con termost. 500w e connettori	j,d1, f1, g1, h1
69	093487	514R116..	Thermostat spring	Molla per fissaggio termostati	
70	093572	514R110..	Heating element spring 4R	Molla per fissaggio resistenza 4R	a,c,d,f,h,i,k,l,m,p, q,r,s,t,w,x,y,z,c1, e1,h1,t1,u1
70	093548	514R109..	Heating element spring 5R	Molla per fissaggio resistenza 5R	b,e up to wk22.2015 j1,m1,n1,o1,p1,q1, r1,s1,v1,w1
70	094572		Heating element spring 4R	Molla per fissaggio resistenza 4R	b,e,g from wk23.2015 n,o,u,v,a1,b1
70a	093414	501R386..	Air conveyor	Deviatore aria	up to 228100....
71	088557	6487271..	Contactor	Teleruttore	
72	093573	501R44903	Evaporator convoyer 3 holes	Convogliatore evap. 3 fori	a,c,d,f,h,i,k,l,m,p, q,r,s,t,w,x,y,z,c1, d1,e1,f1,g1,t1,u1
72	**093573**	**501R44903**	**Evaporator convoyer 3 holes**	**Convogliatore evap. 3 fori**	**h1,m1,n1,o1,p1, q1,r1,s1,v1,w1 from 2022/12 up to 2023/49**
72a	093314	501R44803	Evaporator convoyer 2 holes	Convogliatore evap. 2 fori	b,e up to 22/2015
72a	094573	502R63800	Evaporator convoyer 2 holes	Convogliatore evap. 2 fori	b,e from 23/2015
72a	**093314**	**501R44803**	**Evaporator convoyer 2 holes**	**Convogliatore evap. 2 fori**	**g,h1,m1,n1,o1,p1, q1,r1,s1,v1 up to 2022/11**
72a	**093314**	**501R44803**	**Evaporator convoyer 2 holes**	**Convogliatore evap. 2 fori**	**g,h1,j1,m1,n1,o1, p1,q1,r1,s1,v1 from 2023/50**
72a	094573	502R63800	Evaporator convoyer 2 holes	Convogliatore evap. 2 fori	n,o,u,v,a1,b1
73	093528	639R099..	Clamp	Morsettiera	Up to 2022/41
73	093528	639R099..	Clamp	Morsettiera	Remote full door - d1,f1,g1 From 2022/42
73	093528	639R099..	Clamp	Morsettiera	Full door - a,b,d, e,f,g,h,k,l,m, n,o,p,q,s,t,u,v, w,x,z,a1,b1,c1,e1, t1,u1 From 2022/42
73	093528	639R099..	Clamp	Morsettiera	Full door R290 - j1,m1,n1,o1,p1,q1, r1,s1,v1,w1 From 2022/42
73	093528	639R099..	Clamp	Morsettiera	Glass door - c,i,r,y From 2022/42

Pos	Code	Factory code	Description	Descrizione	Ref/notes
73	093528	639R099..	Clamp	Morsettiera	h1 From 2022/42
74	093261	835R241	Evaporator cover	Assieme Calotta	Up to 6181
74	*	835R47601	Evaporator cover	Assieme Calotta	From 6191
75	093262	14701R0..	Gasket cover (neoprene 8x13,3)	Neoprene espa. 8x13,3 nero (M4)	
76	093245	2175552..	Cover screw	Vite senza punta x plastica 7 -20	
77	093263	546R197..	Pipe cover insulation	Tamponcino per tubi	
77	093614	0546R25800	Pipe cover insulation	Tamponcino per tubi	j,d1,f1,g1,h1
78	093976	546R267..	Wiring cover	Copertura impianto elettrico	Full door up to 2021/37
78	093976	546R267..	Wiring cover	Copertura impianto elettrico	Glass door always
78a	094425	546R265..	Cover	Coperchio copertura impianto elettrico	Full door up to 2021/37
78a	094425	546R265..	Cover	Coperchio copertura impianto elettrico	Glass door always
79	096636	694R00502	Electrical filter	Filtro antidisturbo	
80	093415	617R078..	Drain heating	Resistenza scarico condensa	
80a	093416	1100670..	Drain heating cable protection	Guaina per resistenza scarico con.	
81	**097000**	**682R02C00**	**Evaporator fan motor**	**Ventilatore evaporatore fime**	**b,e,g,n,o,u,v,a1, b1,h1,m1,n1,o1, p1,q1,r1,s1,v1,w1 from 2022/12 up to 2023/49**
82	093489	559R019..	Air blanketing	Coibentazione carter	
82a	093485	555R056..	Air blanketing (plus)	Coibentazione carter aggiunta	up to 228100....
83	084987	6947008..	Procon filter LC	Filtro Procond tipo LC	c,i,r,y,h1
84	093607	0501R63701	Drainer	Sgocciolatoio	j,d1,f1,g1,h1
85	093605	0617R07902	Water evaporation heating element	Resistenza evaporazione 100W	d1,f1,g1,h1 up to 2021/37
85	097289	0617R26100	Water evaporation heating element	Resistenza evaporazione 100W	j,d1,f1,g1,h1 from 2021/38
86	093606	0501R63601	Water condensation basin	Bacinella evaporazione	j,d1,f1,g1,h1
87	093604	0514R13101	Protection grid	Griglia protezione resistenza	j,d1,f1,g1,h1
88	087334	0646741000	Thermostatic Valve (404A)	Valvola termostatica (404A)	d1,f1,g1,h1
88	**095541**	**0646R13900**	**Thermostatic Valve R407C (= R448A)/ R449A**	**Valvola termostatica R407C (= R448A)/R449A**	**j**
89	089614	0565717600	Valve insulation	Isolante per valvola	j,d1,f1,g1,h1
90	090229	0525719000	Filter	Filtro meccanico a rete	j,d1,f1,g1,h1
91	094435	0646R10502	Solenoid valve	Valvola solenoide	j,d1,f1,g1,h1
92	094617	0501R49702	Upper front covering AISI 304	Rivestimento anteriore superiore AISI 304	
99	*	880R104	Panel with termoregulator A304	Cruscotto con termoregolat. A304	a,b,f,g,h,l,n,p,m1, o1,q1,r1,t1,u1
99	*	880R104	Panel with termoregulator A430	Cruscotto con termoregolat. A430	d,e,k,m,o,t,v,z,b1, n1,p1,s1
99	*	880R609..	Panel with termoregulator A304 GL	Cruscotto con termor.. PV A304	c,i,r,y,h1
99		**883R79703**	**Panel with termoregulator A430 TN**	**Cruscotto con termoregolat. A430 TN**	**j,d1,f1,g1 up to 2024/26**
99		**884R02000**	**Panel with termoregulator A430 TN**	**Cruscotto con termoregolat. A430 TN**	**j,d1,f1,g1 from 2024/27**
99		883R81600	Panel with termoregulator A304 BT R404	Cruscotto con termoregolat. A304 BT R404	a,f,h,l,p,x,c1 from 2021/38
99		883R80900	Panel with termoregulator A304 BT R404 UK	Cruscotto con termoregolat. A304 BT R404 UK	e1,t1 from 2021/38
99		883R79603	Panel with termoregulator A304 BT R290	Cruscotto con termoregolat. A304 BT R290	m1,o1,q1 from 2021/38
99		883R33100	Panel with termoregulator A304 BT	Cruscotto con termoregolat. A304 BT	g from 2021/38

Pos	Code	Factory code	Description	Descrizione	Ref/notes
99		883R33200	Panel with termoregulator A430 BT	Cruscotto con termoregolat. A430 BT	d,m,z from 2021/38
99		883R80201	Panel with termoregulator A430 BT R290	Cruscotto con termoregolat. A430 BT R290	h1,n1,p1,s1 from 2021/38
99		883R81300	Panel with termoregulator A430 BT UK	Cruscotto con termoregolat. A430 BT UK	k from 2021/38
99		883R67000	Panel with termoregulator A304 BT R404 UK plug	Cruscotto con termoregolat. A304 BT R404 spina UK	u1
99		883R73700	Panel with termoregulator A430 BT R290 UK plug	Cruscotto con termoregolat. A430 BT R290 spina UK	v1
99		883R93900	Panel with termoregulator A430 BT R290 UK plug	Cruscotto con termoregolat. A430 BT R290 spina UK	w1
99		**883R87902**	**Panel with termoregulator A304 BT R290 UK plug**	**Cruscotto con termoregolat. A304 BT R290 spina UK**	**j1**
100	095827	509R13004	Panel 304 AISI	Cruscotto A304	a,b,c,f,g,h,i,l,n,p, q,r,s,u,w,x,y,a1, c1,e1,h1,m1,o1, q1,r1,t1 up to 2021/37
100		509R25201	Cruscotto A304	Panel 304 AISI	a,b,c,f,g,h,i,l,n,p, q,r,s,u,w,x,y,a1, c1,e1,h1,j1,m1,o1, q1,r1,t1,u1 From 2021/38
100	094436	509R13104	Panel 430 AISI	Cruscotto A430	d,e,j,k,m,o,t,v,z,b1, d1,f1,g1,n1,p1,s1 up to 2021/37
100		509R25301	Cruscotto A430	Panel 430 AISI	d,e,j,k,m,o,t,v,z,b1, d1,f1,g1,h1,n1,p1, s1,v1,w1 From 2021/38
102	093609	832R101..	Hinge for panel dx	Cerniera per cruscotto dx	
103	093345	833R209..	Latch	Serratura	
104	087485	6407121..	Door switch	Micro porta	up to 228100....
104	094035	640R021..	Door switch	Micro porta	from 229100.... Up to 2026/21
104	**09A29Z**	**640R00N00**	**Micro porta**	**Switch**	**From 2026/22**
105	093532	646R108..	Thermoregulator Gab/Mass	Termoregolatore ir33 gab/mass	a,b,d,e,f,g,h,k,l,m, n,o,p,q,s,t,u,v,w, x,z,a1,b1,c1,e1, m1,n1,o1,p1,q1, r1,s1,t1,u1,v1 Up to 2022/41 Order KIT 097586 See TB VTX2022_08
105	093329	646R110..	Thermoregulator Gab/Mass GL	Termoregolatore ir33 gab/mass PV	c,i,r,y,d1,f1,g1,h1 Up to 2022/41 Order KIT 097586 See TB VTX2022_08
105	097579	855R18400	Termoregolatore Carel IJF	Thermoregulator Carel IJF	From 2022/42 Up to 2024/19
105	**09A1NM**	**855R0BY00**	**Termoregolatore Carel IJF**	**Thermoregulator Carel IJF**	**From 2024/20**
106	094389	501R37403	Protection led-lamp	Protezione	Glass door Up to 2021/43
106	097245	504R35000	Protection led-lamp	Protezione	Glass door From 2021/44
106	093975	546R26601	Protection led-lamp	Protezione	Full door Up to 2022/41
106	097576	504R39300	Protection led-lamp	Protezione	From 2022/42

Pos	Code	Factory code	Description	Descrizione	Ref/notes
107	093354	501R37502	Bracket support	Staffa fiss. protez.trmoregolatore	Full door up to 2021/37
107	093354	501R37502	Bracket support	Staffa fiss. protez.trmoregolatore	Glass door always
108	0L0113	1400880..	Guarnizione	Guarnizione	
109	093268	755R039..	Stiker	Membrana adesiva	g,x,z,c1,e1,q1
109	095022	598R81500	Zanussi sticker	Membrana Zanussi	For Zan products up to 2021/37
109	097058	598R98601	Zanussi sticker	Membrana Zanussi	For Zanussi prod from 2021/38
109	095023	598R81601	Electrolux Professional sticker	Membrana Electrolux Professional	For Elux Prof and To Brand prod Up to 2021/37
109	096577	598R98301	Electrolux Professional sticker	Membrana Electrolux Professional	For Elux Prof prod from 2021/38
109	095024	598R81701	Alpen sticker	Membrana Alpen	For Alpen prod
109		598R95600	Blizzard Professional sticker	Membrana Blizzard Professional	b1
110	092353	546R121..	Door switch protection	Protezione micro	
112	093321	639R104..	Clamp	Morsetto	
113	093610	832R102..	Hinge for panel dx	Cerniera per cruscotto dx	
117	*	639R068..	Connector 3 ways right	Connettore dritto 3 vie	
117	*	639R069..	Connector 7 ways right	Connettore dritto 7 vie	
117	099740	*	Connector 7 ways 90°	Connettore 90° 7 vie	
117	099741	*	Connector 5 ways 90°	Connettore 90° 5 vie	
117	088998	*	Connector 3 ways 90°	Connettore 90° 3 vie	
117	099743	*	Connector 3 ways 90° small	Connettore 90° 3 vie piccolo	
117	099742	*	Connector 2 ways 90°	Connettore 90° 2 vie	
117	091682	*	Connector 4 ways 90°	Connettore 90° 4 vie	
117	091684	*	Connector 5 ways 90°	Connettore 90° 5 vie	
117	097578	639R04V00	Connettore femmina 3 vie	Connector 3 ways female	From 2022/42
*	093180	639R096..	UK plug converter	Convertitore spina UK	b,e,u,w,a1,b1,e1
118	093270	624R014..	Light power GL	Alimentatore PV	c,i,j,r,y,d1,f1,g1,h1
119	093486	639R006..	Clamp one section	Morsetto ad una via	c,i,j,r,y,d1,f1,g1,h1