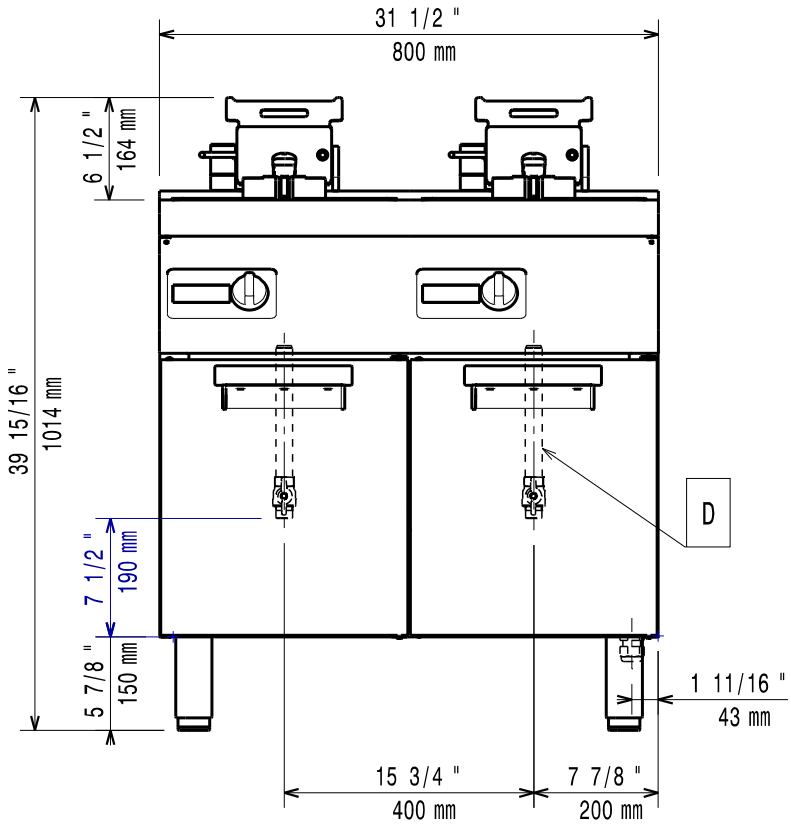
31 1/2 "
800 mm
6 1/2 "
164 mm
39 15/16 "
1014 mm
7 1/2 "
190 mm
5 7/8 "
150 mm
D
1 11/16 "
43 mm
15 3/4 "
400 mm
7 7/8 "
200 mm

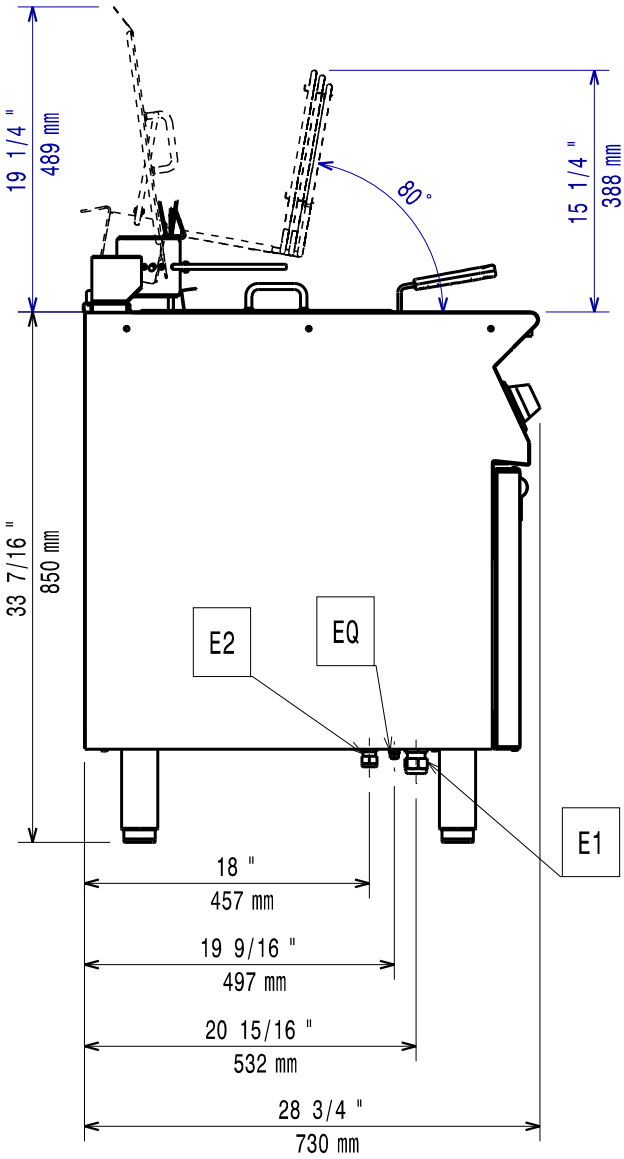
19 1/4 "
489 mm
80°
15 1/4 "
388 mm
33 7/16 "
850 mm
E2
EQ
E1
18 "
457 mm
19 9/16 "
497 mm
20 15/16 "
532 mm
28 3/4 "
730 mm

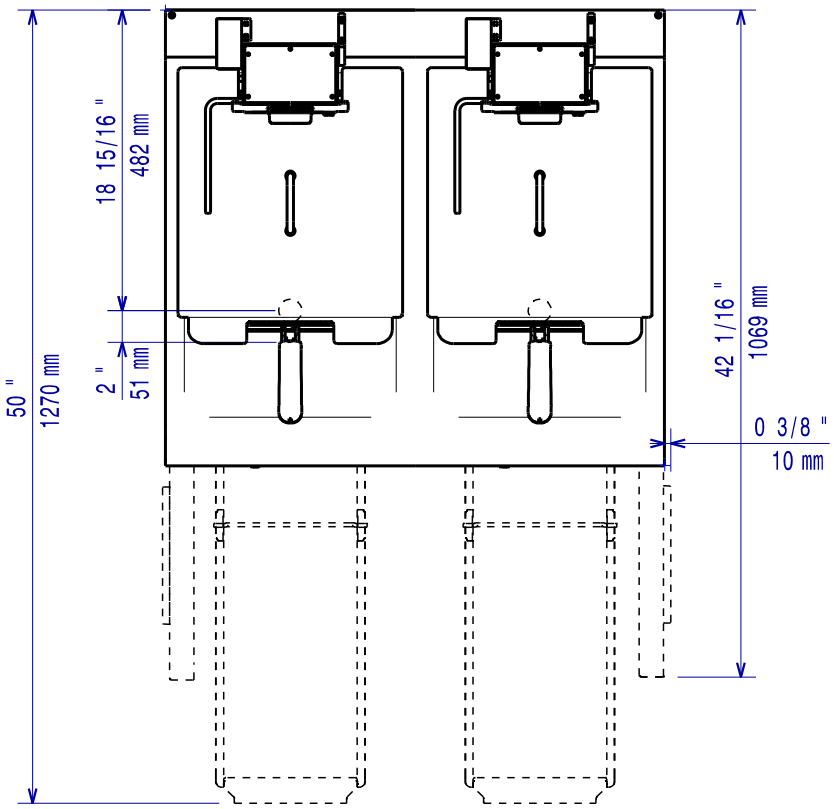
18 15/16 "
482 mm
2 "
51 mm
50 "
1270 mm
42 1/16 "
1069 mm
0 3/8 "
10 mm

59785Z500