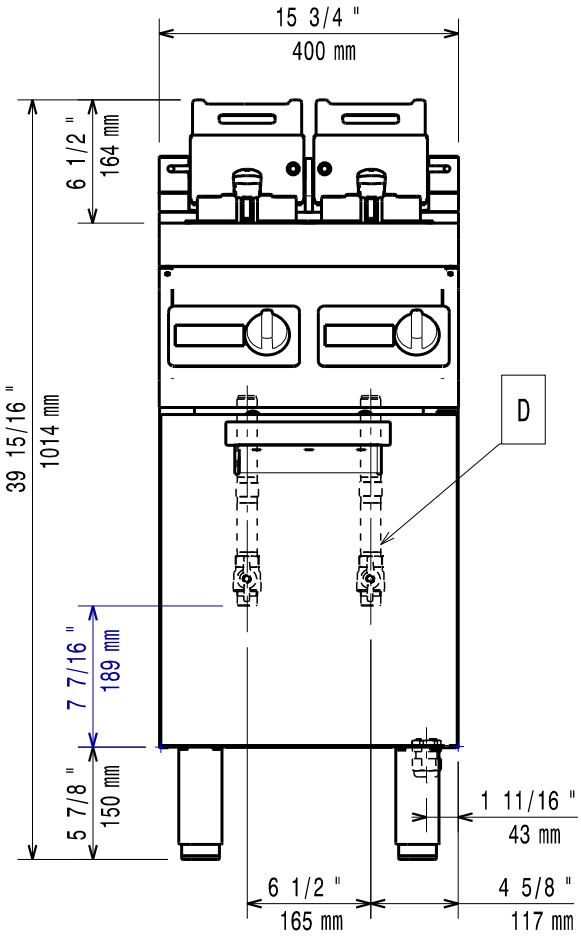
15 3/4 "
400 mm
6 1/2 "
164 mm
39 15/16 "
1014 mm
D
7 7/16 "
189 mm
5 7/8 "
150 mm
1 11/16 "
43 mm
6 1/2 "
165 mm
4 5/8 "
117 mm

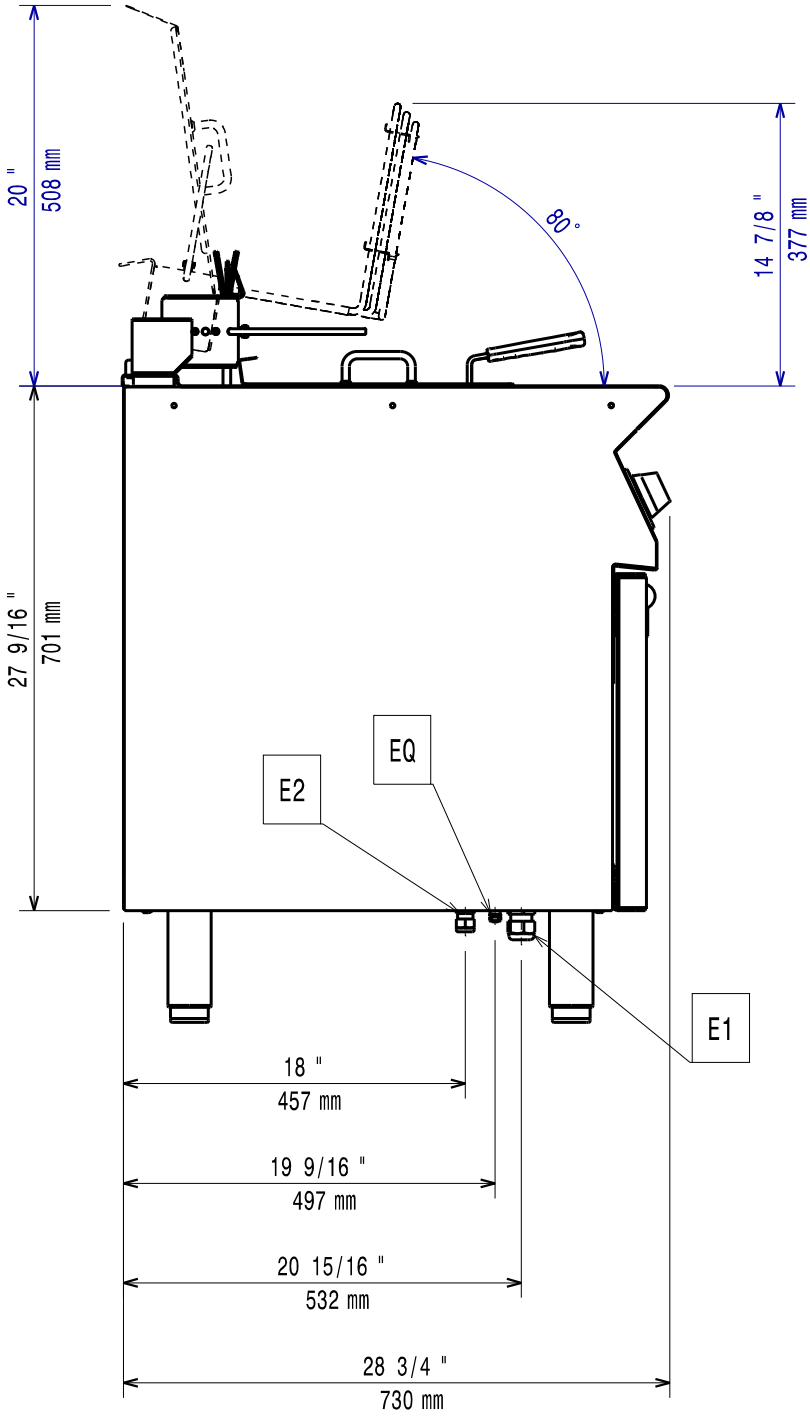
20 "
508 mm
80°
14 7/8 "
377 mm
27 9/16 "
701 mm
EQ
E2
E1
18 "
457 mm
19 9/16 "
497 mm
20 15/16 "
532 mm
28 3/4 "
730 mm

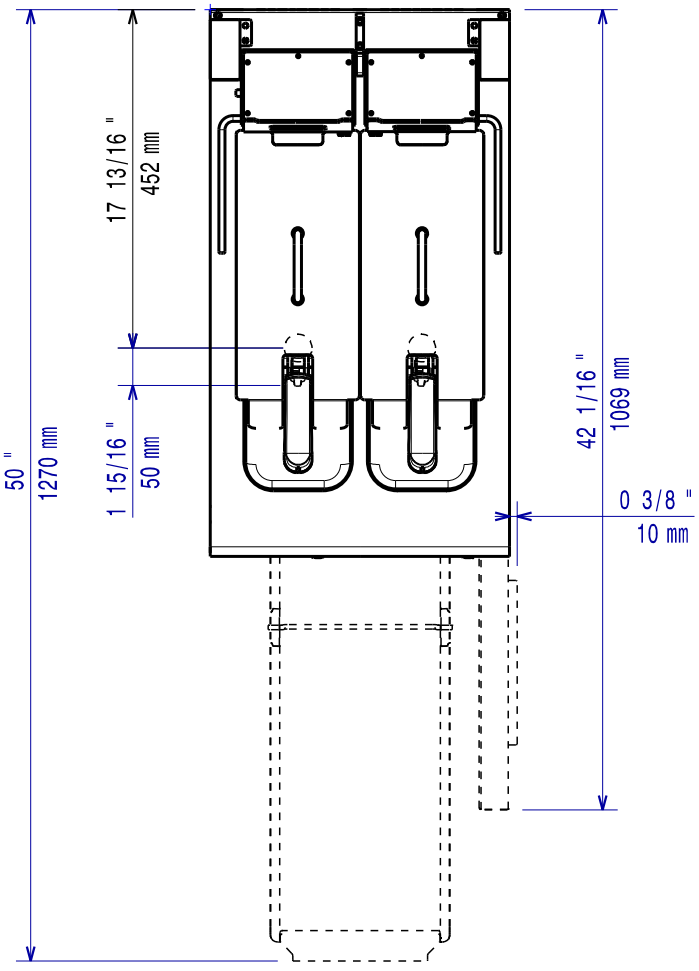
17 13/16 "
452 mm
1 15/16 "
50 mm
50 "
1270 mm
42 1/16 "
1069 mm
0 3/8 "
10 mm

59785Z100