MOD : SR1244-RL4

Production code : DSSCLE12418DIA



10/2026

1 x32 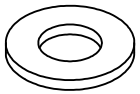	2 x32 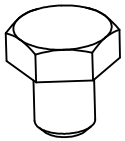	4 x4 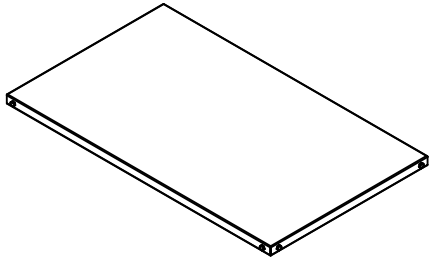	5 x4 	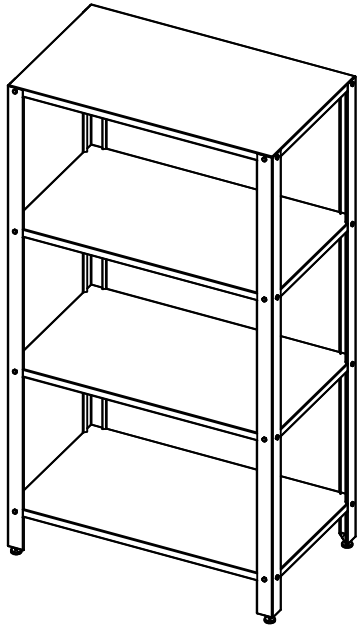
3 x36 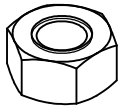	6 x4 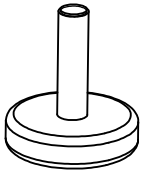			

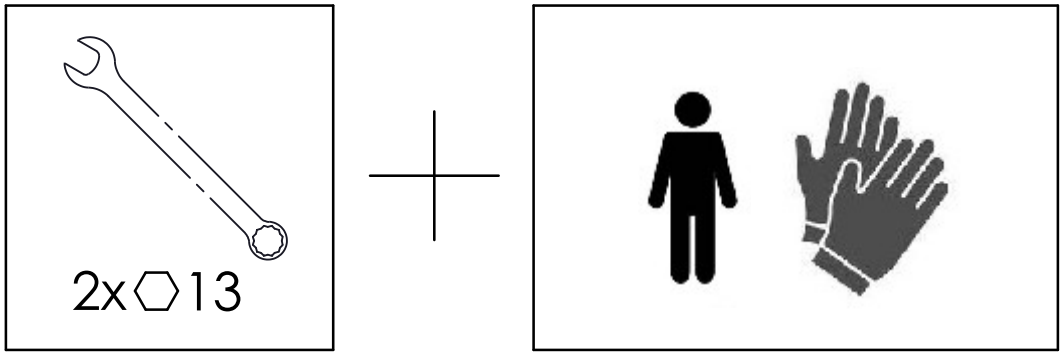

1

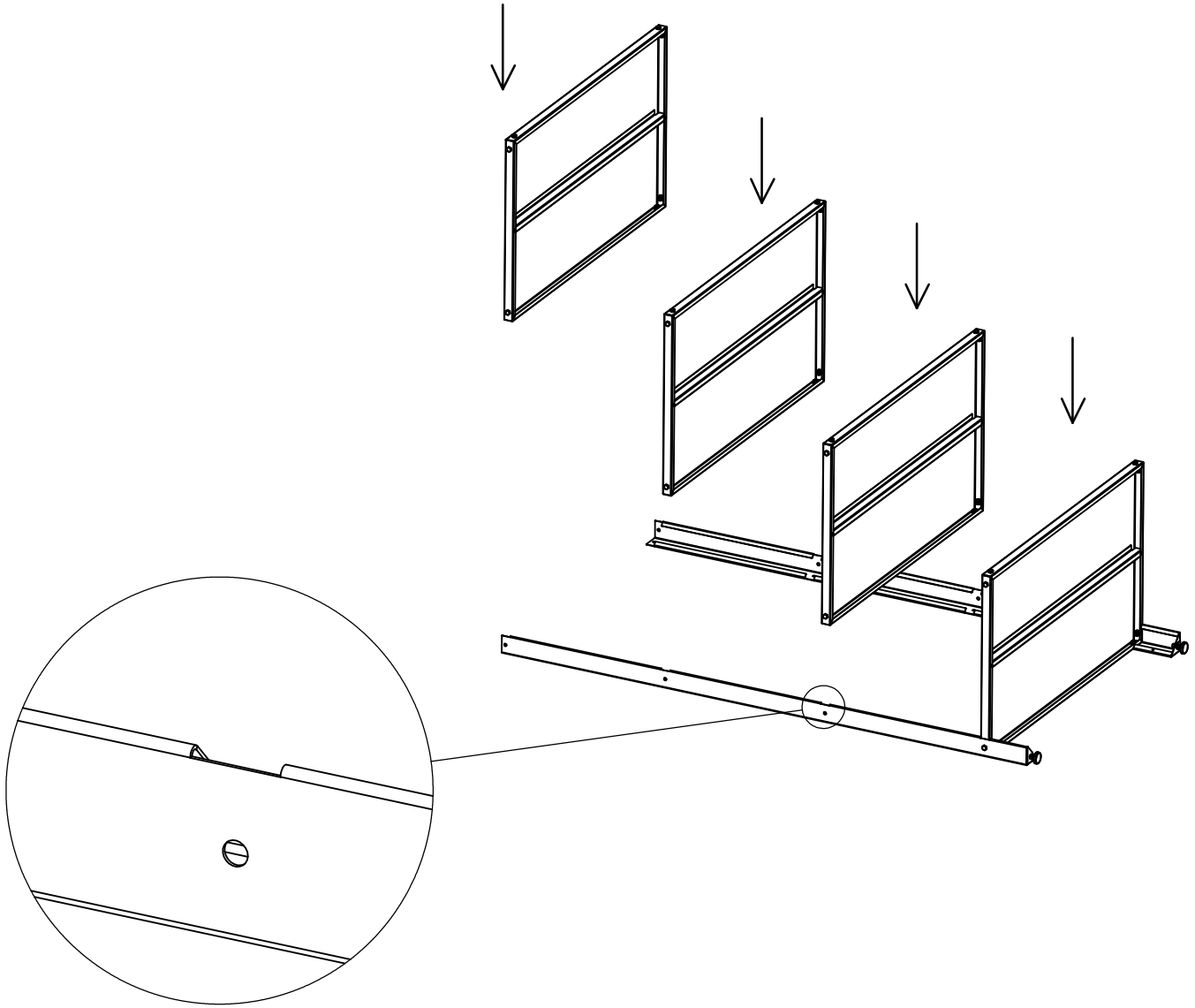

2

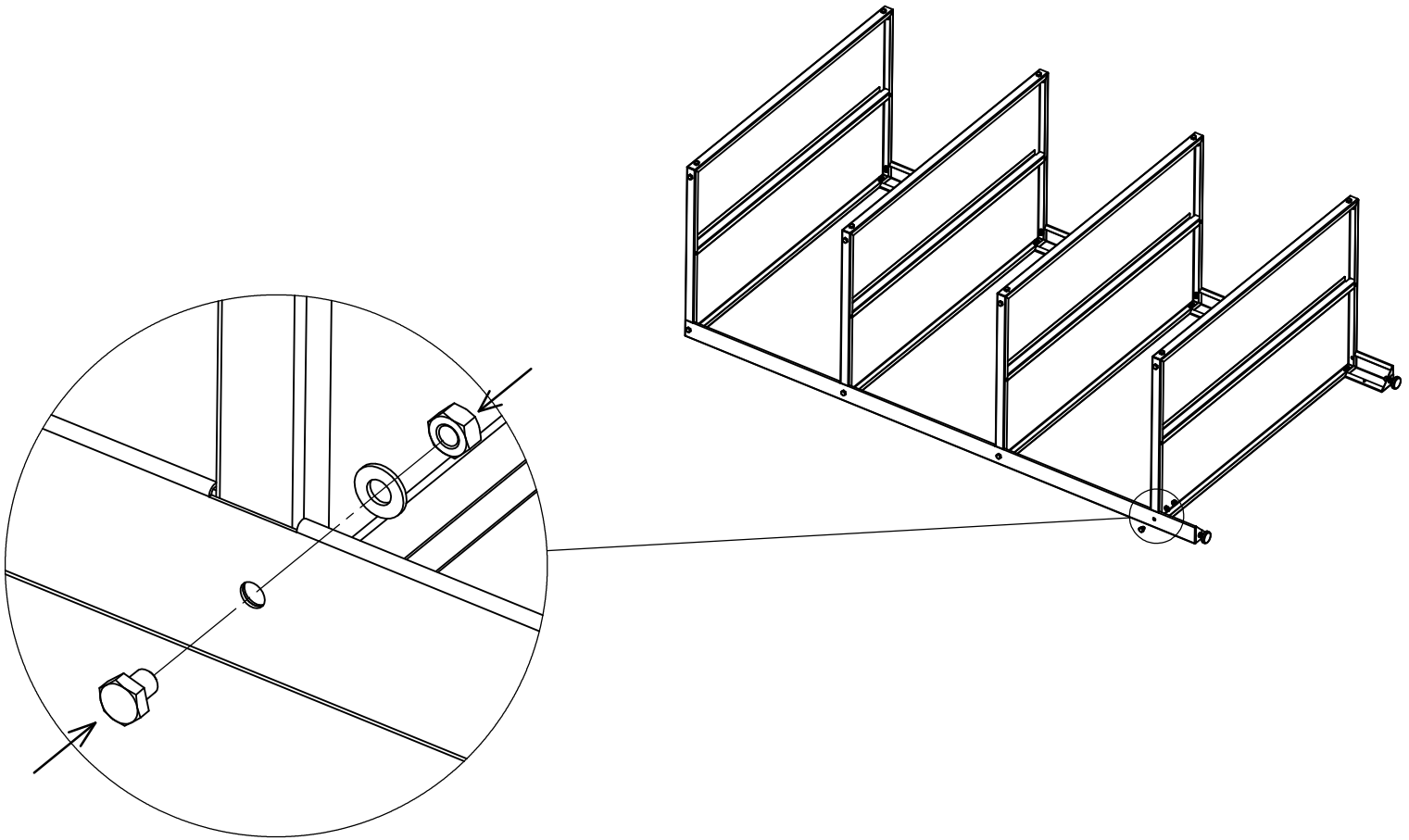

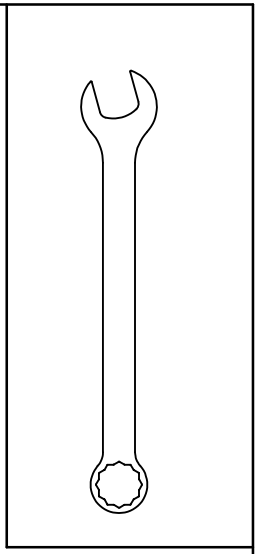

3

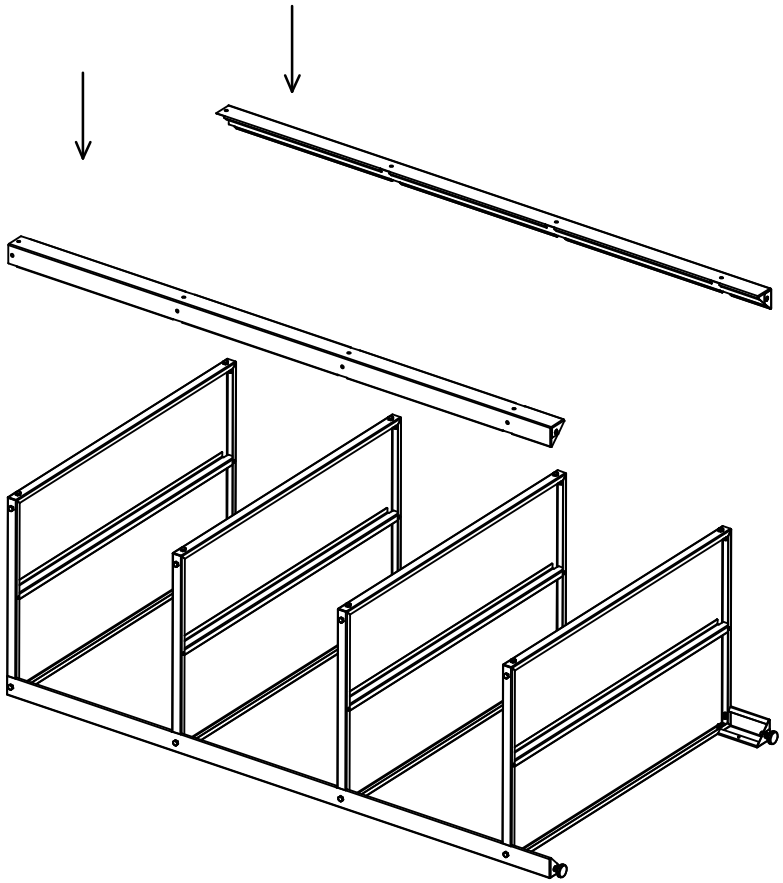

4

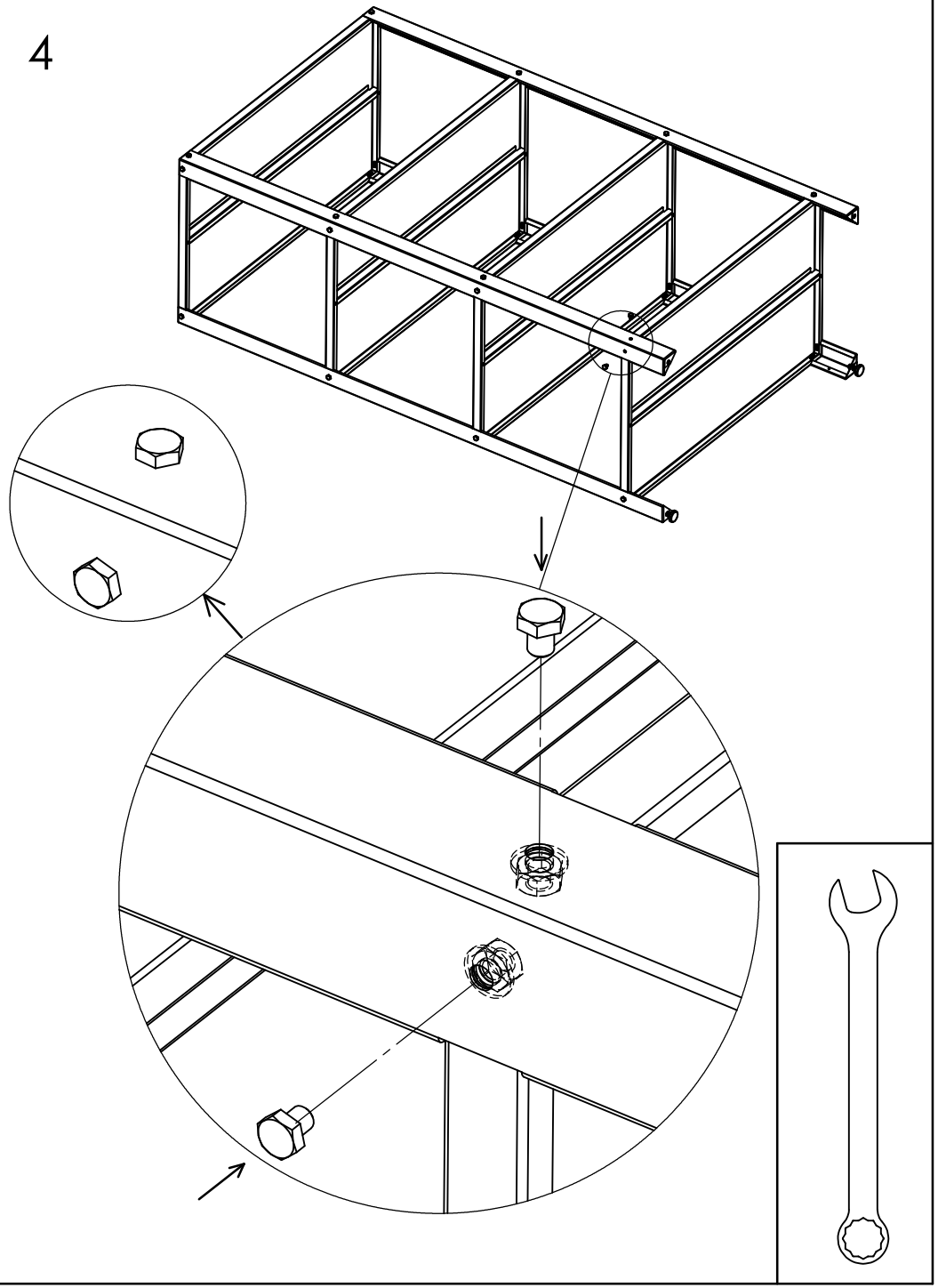

5

